KATKO ConnectSafe

katko.com

Connectors & Junction boxes

Built for
what can’t fail.
KATKO

Contents

Connectors & Junction Boxes

KC & KL Terminal Blocks (AC) 8

KL Terminal Blocks (DC) 10

Junction Boxes 11

KKL Cable Connectors 12

KKL Vertical Cable Connectors 13

KLH Cable Connectors 13

UL-Listed Products

KLH Cable Connectors UL 486A-486B 14

KL Terminal Blocks - UL 1059 15

Accessories 16

Dimensional Drawings of Connectors & Junction Boxes

KC & KL Terminal Blocks 18

Junction Boxes 21

KKL Cable Connectors 24

Spreaders 32

Terminal Shrouds 33

Number of Conductors Simultanously Connectable to the Terminal 34

KATKO Switches and Cable Connectors Compatibility Table 36

We don’t just produce, we perfect.

KATKO is a Finnish family-owned company in the electrical industry with over 80 years of experience in designing, manufacturing, and delivering high-quality switches and installation solutions. At KATKO, we are driven by a strong commitment to sustainability and installer-friendly solutions and masters real-world applications through distinctly Finnish design principles: functionality without compromise, beauty in simplicity, built to endure. Supported by our extensive network of distribution partners and manufacturing facilities in Finland and Poland, we are able to ensure the availability of our solutions in over 70 countries around the globe.

We are the people behind systems that can’t fail.

ConnectSafe Connectors & Junction Boxes

ConnectSafe products are designed for real-world installations, combining innovative design, reliable performance, and the precision of Finnish engineering. The product range covers solutions from cable connections to installation and junction boxes, making electrical work safer, faster, and more dependable.

All solutions meet the highest international quality and safety standards and are designed with the user and ease of installation in mind, ensuring a smooth installation and operating experience. Engineered for precision, practicality, and long-term reliability, ConnectSafe solutions ensure dependable performance in electrical systems where efficiency and reliability truly matter.

FESTOOL
MADE IN FINLAND

KC & KL Teminal Blocks (AC)

KATKO ConnectSafe terminal blocks provide safe and reliable electrical connections for demanding industrial and building applications. Suitable for both copper and aluminum conductors, they are available with screw and DIN-rail mounting options, enabling fast and easy installation. Their robust construction and clear design ensure long service life and trouble-free operation. ConnectSafe terminals meet high industry standards and international approvals, delivering dependable performance for professional use.

- For Al/Cu conductors: Al 2.5 - 300 mm2 / Cu 1.5 - 300 mm2 (KC for Cu conductors only)
- KL 1X16 & KC-terminals 16 - 35 mm2 for DIN-rail mounting
- KL-terminals 50 - 300 mm2 for DIN-rail or base mounting
- Available in grey, blue (N) and yellow/green (PE)
- Operating temperature is -25 °C ...+80 °C
- 1000 VAC and 1500 VDC
- Touchproof, IP20 (For sizes 50–300 mm2, a separate terminal shrouds may be required, depending on the conductor diameter)
- Available as 1-pole connector (1x) and 1-pole branching connector (2x)
- 50 and 95 mm2 connectors also available as 1-pole branching connector (3x) and 3-pole connector (3x1x)
- Halogen and phosphorus free materials
- Terminal material tin-coated, greased aluminium
- Durable laser markings
- KL terminal blocks compatible with markers
- Certified according to IEC 61238-1 Class A and IEC 60947-7-1
- UL certified terminal blocks available, see UL section of this catalogue

KL terminal blocks have a place for attaching a marker

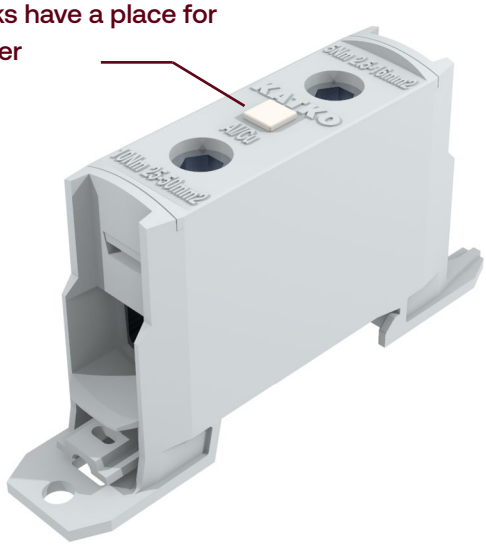

We continuously improve our products; specifications, features and appearances may change without prior notice.

KC & KL Teminal Blocks (AC)

TYPE	UN (VAC)	IN (AL) (A)	IN (CU) (A)	AL/CU MM2	TORQUE AL/CU (NM)	NO OF CONDUCTORS	KEY SIZE	MOUNTING	EAN CODE 6419410…	WEIGHT KG	PACKAGE SIZE PCS
KC1X16									...357200		
KC1X16N	800	–	63	1.5–16*	1.8	2	PZ2	DIN	...357217	0.021	100
KC1X16PE									...357224		
KC2X16									...357507		
KC2X16N	800	–	125	1.5–16*	1.8	4	PZ2	DIN	...357514	0.047	50
KC2X16PE									...357521		
KC1X35									...357231		
KC1X35N	800	–	135	2.5–35*	2.5	2	PZ2	DIN	...357248	0.03	84
KC1X35PE									...357255		
KC2X35									...357538		
KC2X35N	800	–	270	2.5–35*	2.5	4	PZ2	DIN	...357545	0.069	42
KC2X35PE									...357552		
KL1X16									...484364		
KL1X16N	1000	75	76	1.5 – 16	5		Hex 4	DIN	...484371	0.022	
KL1X16PE						2			...484562		60
KL5X1X16						6			...484364		20
KL50SET						5			... 370193	0.186	
KL1X50	1000	160	160	2.5 – 50	5 (2.5 – 16 mm²)		Hex 5	Screw / DIN	…378250		
KL1X50N					10 (25 – 50 mm²)	2			…378267	0.060	32
KL1X50PE									…378274		
KL2X50									…378281		
KL2X50N	1000	200	320	2.5 – 50	5 (2.5 – 16 mm²) 10 (25 – 50 mm²)	4	Hex 5	Screw / DIN	…378298	0.104	18
KL2X50PE									…378304		
KL3X50									...205587		
KL3X50N	1000	160	160	2.5 – 50	5 (2.5 – 16 mm2) 10 (25 – 50 mm2)	6	Hex 5	Screw / DIN	...205594	0.098	10
KL3X50PE									...205600		
KL3X1X50									...205617		
KL3X1X50N	1000	160	160	2.5 – 50	5 (2,5 – 16 mm2) 10 (25 – 50 mm2)	6	Hex 5	Screw / DIN	...205624	0.098	10
KL3X1X50PE									...205631		
KL1X95									…378311		
KL1X95N	1000	200	245	6 – 95	12 (6 – 50 mm²) 22 (70 – 95 mm²)	2	Hex 6	Screw / DIN	…378328	0.096	22
KL1X95PE									…378335		
KL2X95									…378342		
KL2X95N	1000	400	490	6 – 95	12 (6 – 50 mm²) 22 (70 – 95 mm²)	4	Hex 6	Screw / DIN	…378359	0.169	12
KL2X95PE									…378366		
KL3X95									...205648		
KL3X95N	1000	200	245	6 – 95	12 (6 – 50 mm²) 22 (70 – 95 mm²)	6	Hex 6	Screw / DIN	...205655	0.202	6
KL3X95PE									...205662		
KL3X1X95									...205679		
KL3X1X95N	1000	200	245	6 – 95	12 (6 – 50 mm²) 22 (70 – 95 mm²)	6	Hex 6	Screw / DIN	...205686	0.202	6
KL3X1X95PE									...205693		
KL1X150					12 (25 – 50 mm²)				…378373		
KL1X150N	1000	250	320	25 – 150	22 (70 – 95 mm²)	2	Hex 6	Screw / DIN	…378380	0.181	18
KL1X150PE					38 (120 – 150 mm²)				…378397		
KL2X150					12 (25 – 50 mm²)				…378403		
KL2X150N	1000	500	640	25 – 150	22 (70 – 95 mm²)	4	Hex 6	Screw / DIN	…378410	0.317	10
KL2X150PE					38 (120 – 150 mm²)				…378427		
KL1X240									…378434		
KL1X240N	1000	315	425	35 – 240	25 (35 – 120 mm²) 55 (150 – 240 mm²)	2	Hex 8	Screw / DIN	…378441	0.293	14
KL1X240PE									…378458		
KL2X240									…378465		
KL2X240N	1000	630	850	35 – 240	25 (35 – 120 mm²) 55 (150 – 240 mm²)	4	Hex 8	Screw / DIN	…378472	0.522	8
KL2X240PE									…378489		
KL1X300									...484388		
KL1X300N	1000	400	520	95 – 300	45 (95–120 mm2) 75 (150–300 mm2)	2	Hex 12	Screw / DIN	...484395	0.491	12
KL1X300PE									...378816		
KL2X300									...484401		
KL2X300N	1000	800	1040	95 – 300	45 (95–120 mm2) 75 (150–300 mm2)	4	Hex 12	Screw / DIN	...484418	0.901	6
KL2X300PE									...378823		

* Cu only

We continuously improve our products; specifications, features and appearances may change without prior notice.

KL Terminal Blocks (DC)

KATKO ConnectSafe terminal blocks provide safe and reliable electrical connections for demanding industrial and building applications. Suitable for both copper and aluminum conductors, they are available with screw and DIN-rail mounting options, enabling fast and easy installation. Their robust construction and clear design ensure long service life and trouble-free operation. ConnectSafe terminals meet high industry standards and international approvals, delivering dependable performance for professional use.

- For Al/Cu conductors: Al 2.5 - 300 mm2 / Cu 1.5 - 300 mm2
- KL-terminals 50 - 300 mm2 for DIN-rail or base mounting
- Available in red (P) and black (M)
- Operating temperature is -25 °C ...+80 °C
- Halogen and phosphorus free materials
- Terminal material tin-coated, greased aluminium
- KL terminal blocks compatible with markers
- Durable laser markings
- Certified according to IEC 61238-1 Class A and IEC 60947-7-1

TYPE	UN (VDC)	IN (AL) (A)	IN (CU) (A)	AL/CU MM2	TORQUE AL/CU (NM)	NUMBER OF CON-DUCTORS	KEY SIZE	MOUNTING	EAN CODE 6419410…	WEIGHT KG	PACKAGE SIZE PCS
KL1X50P	1500	160	160	2.5 – 50	5 (2.5 – 16 mm²) 10 (25 – 50 mm²)	2	Hex 5	Screw / DIN	338087	0.060	32
KL1X50M									338094		
KL2X50P KL2X50M	1500	200	320	2.5 – 50	5 (2.5 – 16 mm²) 10 (25 – 50 mm²)	4	Hex 5	Screw / DIN	....338124 338131	0.104	18
KL1X95P	1500	200	245	16 – 95	12 (16 – 50 mm²) 22 (70 – 95 mm²)	2	Hex 6	Screw / DIN	338148	0.096	22
KL1X95M									338155		
KL2X95P KL2X95M	1500	400	490	16 – 95	12 (16 – 50 mm²) 22 (70 – 95 mm²)	4	Hex 6	Screw / DIN	....338162 338179	0.169	12
KL1X150P	1500	250	320	25 – 150	12 (25 – 50 mm²) 22 (70 – 95 mm²) 38 (120 – 150 mm²)	2	Hex 6	Screw / DIN	338186	0.181	18
KL1X150M									338193		
KL2X150P KL2X150M	1500	500	640	25 – 150	12 (25 – 50 mm²) 22 (70 – 95 mm²) 38 (120 – 150 mm²)	4	Hex 6	Screw / DIN	....338209 338216	0.317	10
KL1X240P	1500	315	425	35 – 240	25 (35 – 120 mm²) 55 (150 – 240 mm²)	2	Hex 8	Screw / DIN	338223	0.293	14
KL1X240M									338230		
KL2X240P KL2X240M	1500	630	850	35 – 240	25 (35 – 120 mm²) 55 (150 – 240 mm²)	4	Hex 8	Screw / DIN	....338247 338254	0.522	8
KL1X300P	1500	400	520	95 – 300	45 (95–120 mm²) 75 (150–300 mm²)	2	Hex 12	Screw / DIN	338261	0.491	12
KL1X300M									338278		
KL2X300P KL2X300M	1500	800	1040	95 – 300	45 (95–120 mm²) 75 (150–300 mm²)	4	Hex 12	Screw / DIN	....338285 338292	0.901	6

We continuously improve our products; specifications, features and appearances may change without prior notice.

KATKO ConnectSafe

Junction Boxes

KATKO ConnectSafe junction boxes provide protected and reliable cable connections in demanding environments. Available in polycarbonate, sheet steel, stainless steel and aluminium enclosures, the range offers solutions for a wide variety of industrial, commercial and infrastructure applications. The enclosed design protects electrical connections from moisture, dust and mechanical stress, while durable materials ensure long service life and consistent performance.

- Suitable for Cu conductors 1.5 - 300 mm2 and Al conductors 2.5 - 300 mm2
- The enclosed connectors can be flexibly customized to meet the requirements of different applications.
- Terminal material: tin-coated aluminium
- IP66: M3, M4, RA4, RA5, KCS1397PC, KCS13137PC, KCS19139PC & KCS271910PC
- IP65: MF01, MF03 & R6
- All models include:
  - L1, L2 ja L3 terminal blocks, grey (single or double)
  - N- terminal block (single or double)
  - PE -terminal block (single or double)
- Cable glands included
- Durable laser markings
- Certified according to IEC 61238-1 Class A
- Available as EMC

Polycarbonate enclosures

TYPE	UN (V)	IN (AL) (A)	IN (CU) (A)	AL/CU MM2	TORQUE AL/CU (NM)	NO OF CONDUCTORS	KEY SIZE	ENCLOSURE	CABLE GLANDS	EAN CODE 6419410…	WEIGHT KG
KLM5X1X16 KCS1397PC V	1000	75	76	1.5-16	5	2	Hex 4	KCS1397PC	*	...350638	0.6
KLM5X1X16 KCS13137PC	1000	75	76	1.5-16	5	2	Hex 4	KCS13137PC	*	...350645	0.8
KLM5X1X16 KCS19139PC V	1000	75	76	1.5-16	5	2	Hex 4	KCS19139PC	*	...350652	0.9
KLM5X1X16 KCS19139PC H	1000	75	76	1.5-16	5	2	Hex 4	KCS19139PC	*	...350669	1.0
KLM5X1X16 KCS271910PC V	1000	75	76	1.5-16	5	2	Hex 4	KCS271910PC	*	...350324	1.0
KLM5X1X16 KCS271910PC H	1000	75	76	1.5-16	5	2	Hex 4	KCS271910PC	*	...350676	1.0
KLM5X1X50 KCS271910PC V	1000	160	160	2.5 - 50	5 (2.5 - 16 mm²) / 10 (25 - 50 mm2)	2	Hex 5	KCS271910PC	*	...350683	1.9
KLM2X16 M3 4XM32P	800	-	125	1.5-16 (Cu)	1.8	2	PZ2	M3	M32 x4	...391815	0.8
KLM1X50 M4 2XM40P	1000	160	160	2.5 - 50	5 (2.5 - 16 mm²) / 10 (25 - 50 mm2)	2	Hex 5	M4	M40 x2	...391846	1.1
KLM2X50 M4 4XM40P	1000	200	320	2.5 - 50	5 (2.5 - 16 mm²) / 10 (25 - 50 mm2)	2	Hex 5	M4	M40 x4	...391853	1.3
KLM1X95 MF01 2XM63P	1000	200	245	6 - 95	12 (6 - 50 mm²) / 22 (70 - 95 mm2)	2	Hex 6	MF01	M63 x2	...391860	2.3
KLM2X95 MF01 4XM63P	1000	400	490	6 - 95	12 (6 - 50 mm²) / 22 (70 - 95 mm2)	2	Hex 6	MF01	M63 x4	...391877	3.0
KLM2X150 MF03 4XM63P	1000	500	640	25 - 150	12 (25 - 50 mm²) / 22 (70 - 95 mm2) / 38 (120 - 150 mm2)	2	Hex 6	MF03	EPA 2260 x2	...391891	5.0

Stainless steel enclosures, ACID PROOF (RA4, RA5: AISI 316L & R6: AISI 304)

TYPE	UN (V)	IN (AL) (A)	IN (CU) (A)	AL/CU MM2	TORQUE AL/CU (NM)	NO OF CONDUCTORS	KEY SIZE	ENCLOSURE	CABLE GLANDS	EAN CODE 6419410…	WEIGHT KG
KLR1X16 RA4 2XM32M	800		125	1.5 - 16 (Cu)	1.8	2	PZ2	RA4	4 x M32	...391921	2.4
KLR2X16 RA4 4XM32M	800	-	125	1.5-16 (Cu)	1.8	2	PZ2	RA4	4 x M32	...391938	2.4
KLR1X50 RA4 2XM40M	1000	160	160	2.5 - 50	5 (2.5 - 16 mm²) / 10 (25 - 50 mm2)	2	Hex 5	RA4	2 x M40	...391969	2.6
KLR2X50 RA4 4XM40M	1000	200	320	2.5 - 50	5 (2.5 - 16 mm²) / 10 (25 - 50 mm2)	2	Hex 5	RA5	4 x M40	...391976	6.2
KLR1X95 RA5 2XM63M	1000	200	245	6 - 95	12 (6 - 50 mm²) / 22 (70 - 95 mm2)	2	Hex 6	RA5	2 x M63	...391983	6.0
KLR2X95 RA5 4XM63M	1000	400	490	6 - 95	12 (6 - 50 mm²) / 22 (70 - 95 mm2)	2	Hex 6	RA5	4 x M63	...391990	6.8
KLR2X150 R6 4XM63LM	1000	500	640	25 - 150	12 (25 - 50 mm²) / 22 (70 - 95 mm2) / 38 (120 - 150 mm2)	2	Hex 6	R6	2 x EPA 2260	..392010	15.5

Sheet steel enclosures

TYPE	UN (V)	IN (AL) (A)	IN (CU) (A)	AL/CU MM2	TORQUE AL/CU (NM)	NO OF CONDUC-TORS	KEY SIZE	ENCLOSURE	CABLE GLANDS	EAN CODE 6419410…	WEIGHT KG
KLT1X95	1000	200	245	6 - 95	12 (6 - 50 mm²) / 22 (70 - 95 mm²)	2	Hex 6	T5	2 x M50M	...267103	7.5
KLT2X95	1000	400	490	6 - 95	12 (6 - 50 mm²) / 22 (70 - 95 mm²)	2	Hex 6	T5	4 x M50M	...267110	7.5
KLT1X150	1000	250	320	25-150	12 (25 - 50 mm²) / 22 (70 - 95 mm²) / 38 (120 - 150 mm²)	2	Hex 6	T6	2 x M63M	...267141	15.3
KLT2X150	1000	500	640	25-150	12 (25 - 50 mm²) / 22 (70 - 95 mm2) / 38 (120 - 150 mm2)	2	Hex 6	T6	4 x M63M	...267158	15.3
KLT1X240	1000	315	425	35-240	25 (35 - 120 mm²) / 55 (150 - 240 mm²)	2	Hex 8	T6	2 x M63LM	...267189	15.3
KLT2X240	1000	800	1040	95-300	45 (95-120 mm²) / 75 (150-300 mm²)	2	Hex 12	T7	2 x HIK4	...267196	29.3

We continuously improve our products; specifications, features and appearances may change without prior notice.

KKL Cable Connectors

KATKO ConnectSafe cable connectors are designed for the safe and reliable termination of cables in control and distribution panels. They ensure a durable and dependable electrical connection that withstands everyday use and meets the requirements of professional installations. The compact design saves space, while the wide conductor cross-section range makes the terminals a versatile solution for a variety of applications.

- For 1.5-300 mm2 Al/Cu conductors
- Available in 1x and 2x models
- 2x versions in both horizontal and vertical versions
- Halogen and phosphorus free materials
- Material: tin-coated aluminium
- Durable laser markings
- Certified according to IEC 61238-1 Class A

TYPE	UN (V)	IN (AL) (A)	IN (CU) (A)	AL MM²	CU MM²	TORQUE AL/CU (NM)	NUMBER OF CONDUCTORS	KEY SIZE	MOUNTING	EAN CODE 6419410…	WEIGHT KG	PACKAGE SIZE PCS
KKL1X16	690	63	63	1.5-16	1.5-16	2,2 (1,5-16mm²)	1	Hex 3	Direct	...378496	0.01	30
KKL3X1X16T	690	63	63	1.5-16	1.5-16	5	3	Hex 4	Direct	... 292945	0.020	10
KKL1X50T1	690	125	125	16-50	2.5-50	5 (2,5-16mm²) / 10 (25-50mm²)	1	Hex 5	Direct	...378717	0.019	12
KKL1X50T2	690	125	125	16-50	2.5-50	5 (2,5-16mm²) / 10 (25-50mm²)	1	Hex 5	Direct	...378502	0.019	12
KKL1X50T2E	690	125	125	16-50	2.5-50	5 (2,5-16mm²) / 10 (25-50mm²)	1	Hex 5	Direct	... 378717	0.019	12
KKL1X50T3	690	125	125	16-50	2.5-50	5 (2,5-16mm²) / 10 (25-50mm²)	1	Hex 5	Direct	...378724	0.019	12
KKL1X50M	690	125	125	16-50	2.5-50	5 (2,5-16mm²) / 10 (25-50mm²)	1	Hex 5	Direct	...378519	0.017	12
KKL1X50N	690	125	125	16-50	2.5-50	5 (2,5-16mm²) / 10 (25-50mm²)	1	Hex 5	Direct	...378670	0.014	25
KKL1X50	690	160	160	16-50	2.5-50	5 (2,5-16mm²) / 10 (25-50mm²)	1	Hex 5	Bolt	...378571	0.011	25
KKL2X50	690	200	320	16-50	16-50	5 (2,5-16mm²) / 10 (25-50mm²)	2	Hex 5	Bolt M8	...378588	0.023	12
KKL2X50M	690	200	320	16-50	16-50	5 (2,5-16mm²) / 10 (25-50mm²)	2	Hex 5	Bolt M8	...378663	0.023	12
KKL3X1X50TE	690	125	125	2.5-50	2.5-50	5 (2,5-16mm²) / 10 (25-50mm²)	3	Hex 5	Direct	...371961	0.06	1
KKL4X1X50TE	690	125	125	2.5-50	2.5-50	5 (2,5-16mm²) / 10 (25-50mm²)	3	Hex 5	Direct	...371978	0.08	1
KKL1X95	690	200	245	6-95	6-95	12 (6-50 mm²) / 22 (70-95 mm²)	1	Hex 6	Bolt M10	... 200230	0.03	48
KKL1X95M	690	200	245	6-95	6-95	12 (6-50 mm²) / 22 (70-95 mm²)	1	Hex 6	Bolt M8	...378953	0.03	48
KKL2X95	690	400	490	6-95	6-95	12 (6-50 mm²) / 22 (70-95 mm²)	2	Hex 6	Bolt M10	...378601	0.061	48
KKL2X95LR	690	400	490	6-95	6-95	12 (6-50 mm²) / 22 (70-95 mm²)	2	Hex 6	Bolt M10	...205853	0.061	48
KKL1X120T1	690	200	245	16-120	16-120	12 (16-50 mm²) / 22 (70-120 mm²)	1	Hex 6	Direct	...378526	0.037	20
KKL1X120T2	690	200	245	16-120	16-120	12 (16-50 mm²) / 22 (70-120 mm²)	1	Hex 6	Direct	...378533	0.037	20
KKL1X120T3	690	200	245	16-120	16-120	12 (16-50 mm²) / 22 (70-120 mm²)	1	Hex 6	Direct	...378540	0.037	20
KKL1X120T	690	200	245	16-120	16-120	12 (16-50 mm²) / 22 (70-120 mm²)	1	Hex 6	Direct	…378700	0.037	20
KKL1X120TM	690	200	245	16-120	16-120	12 (16-50 mm²) / 22 (70-120 mm²)	1	Hex 6	Direct	...378557	0.037	20
KKL1X120RS	690	200	245	16-120	16-120	12 (16-50 mm²) / 22 (70-120 mm²)	1	Hex 6	Bolt M8	...378687	0.044	20
KKL1X120RSY	690	200	245	16-120	16-120	12 (16-50 mm²) / 22 (70-120 mm²)	1	Hex 6	Bolt M8	...378694	0.044	20
KKL1X150	690	250	320	25-150	25-150	12 (25-50 mm²) / 22 (70-95 mm2) / 38 (120-150 mm²)	1	Hex 6	Bolt M10	…378618	0.073	20
KKL1X150T2	690	250	320	25-150	25-150	12 (25-50 mm2) / 22 (70-95 mm2) / 38 (120-150 mm²)	1	Hex 6	Direct	...378748	0.073	20
KKL2X150	690	500	640	25-150	25-150	12 (25-50 mm²) / 22 (70-95 mm2) / 38 (120-150 mm²)	2	Hex 6	Bolt M12	…378625	0.15	20
KKL2X150M10	690	500	640	25-150	25-150	12 (25-50 mm²) / 22 (70-95 mm2) / 38 (120-150 mm²)	2	Hex 6	Bolt M10	... 356616	0.15	20
KKL2X150LR	690	500	640	25-150	25-150	12 (25-50 mm²) / 22 (70-95 mm2) / 38 (120-150 mm²)	2	Hex 6	Bolt M12	...300459	0.15	20
KKL2X150LRM10	690	500	640	25-150	25-150	12 (25-50 mm²) / 22 (70-95 mm2) / 38 (120-150 mm²)	2	Hex 6	Bolt M10	... 356623	0.15	20
KKL1X240	690	315	425	35-240	35-240	25 (35-120 mm²) / 55 (150-240 mm²)	1	Hex 8	Bolt M12	...378632	0.113	16
KKL1X240M8	690	315	425	35-240	35-240	25 (35-120 mm²) / 55 (150-240 mm²)	1	Hex 8	Bolt M8	...229149	0.113	16
KKL1X240AR250	690	315	425	35-240	35-240	25 (35-120 mm²) / 55 (150-240 mm²)	1	Hex 8	Bolt M12	... 363478	0.113	16
KKL2X240	690	630	850	35-240	35-240	25 (35-120 mm²) / 55 (150-240 mm²)	2	Hex 8	Bolt M12	...378649	0.245	16
KKL1X240TM	690	400	425	35-240	35-240	25 (35-120 mm²) / 40 (150-240 mm²)	1	Hex 8	Bolt M8	...378656	0.113	20
KKL1X240TE	690	400	400	35-240	35-240	25 (35-120 mm²) / 40 (150-240 mm²)	1	Hex 8	Bolt M8	...378731	0.113	20
KKL2X240LR	690	630	850	35-240	35-240	25 (35-120 mm²) / 55 (150-240 mm²)	2	Hex 8	Bolt M12	...378755	0.245	16
KKL1X300	690	400	520	95-300	95-300	45 (95-120 mm2) / 75 (150-300 mm²)	1	Hex 12	Bolt M12	...484289	0.262	10
KKL1X300AR400	690	400	520	95-300	95-300	45 (95-120 mm2) / 75 (150-300 mm²)	1	Hex 12	Bolt M12	... 363485	0.262	10
KKL2X300	690	800	1040	95-300	95-300	45 (95-120 mm2) / 75 (150-300 mm²)	2	Hex 12	Bolt M12	...484296	0.501	3

We continuously improve our products; specifications, features and appearances may change without prior notice.

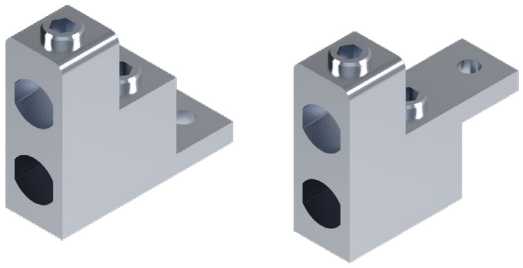

KKL Vertical Cable Connectors

- For 25-300 mm2 Al/Cu conductors
- Blade middle (VM) and blade bottom (VB) models
- Material: tin-coated aluminium
- Durable laser markings
- Certified according to IEC 61238-1 Class A

TYPE	UN (V)	IN (AL) (A)	IN (CU) (A)	AL MM²	CU MM²	TORQUE AL/CU (NM)	NUMBER OF CONDUCTORS	ALLEN KEY SIZE	MOUNTING	EAN CODE 6419410…	WEIGHT KG	PACKAGE SIZE PCS
KKL2X150VB	690	500	640	25-150	25-150	12 (25-50 mm2) / 22 (70-95 mm2) / 38 (120-150 mm2)	2	Hex 6	Bolt M12	...484319	0.18	3
KKL2X150VM	690	500	640	25-150	25-150	12 (25-50 mm²) / 22 (70-95 mm2) / 38 (120-150 mm2)	2	Hex 6	Bolt M12	...484302	0.18	3
KKL2X240VB	690	630	850	35-240	35-240	25 (35-120 mm2) / 40 (150-240 mm2)	2	Hex 8	Bolt M12	...484333	0.339	3
KKL2X240VM	690	630	850	35-240	35-240	25 (35-120 mm²) / 40 (150-240 mm2)	2	Hex 8	Bolt M12	...484326	0.339	3
KKL2X300VB	690	800	1040	95-300	95-300	45 (95-120 mm2) / 75 (150-300 mm2)	2	Hex 12	Bolt M12	...484357	0.572	3
KKL2X300VM	690	800	1040	95-300	95-300	45 (95-120 mm2) / 75 (150-300 mm2)	2	Hex 12	Bolt M12	...484340	0.572	3

KLH Cable Connectors

- Connector with an intermediate part for applying pressure to the conductor
- Suitable for 2 x 50-300 mm2 Al/Cu conductors
- Narrow profile when installed vertically
- Suitable for various conductor types (for example fine stranded and solid)
- Material:
  - Frame: stainless steel
  - Connection bar: tin-plated copper

UL certified cable connectors available, see UL section of this catalogue

TYPE	AL/CU MM2	TORQUE AL/CU (NM)	NO OF CONDUCTORS	KEY SIZE	EAN CODE 6419410…	WEIGHT KG	PACKAGE SIZE PCS
KLH2X150	2 x 50 – 150	44	4	Hex 17	...358580	0.26	3
KLH2X240	2 x 95 – 240	75	4	Hex 19	...358597	0.37	3
KLH2X300	2 x 185 –300	75	4	Hex 19	...358603	0.49	3

We continuously improve our products; specifications, features and appearances may change without prior notice.

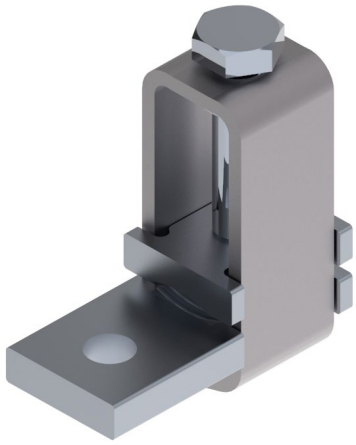

KLH Cable Connectors UL 486A-486B

- UL 486A-486B
- CSA C22.2 No.65.
- Connector with an intermediate part for applying pressure to the conductor
- Suitable for various conductor types (for example fine stranded and solid)
- Narrow profile when installed vertically
- Suitable for 2 x 1/0 AWG - 600 kcmil wires
- Material:
  - Frame: stainless steel
  - Connection bar: tin-plated copper

TYPE	EAN CODE 6419410...	LINE/LOAD WIRE SIZE-STR (KC-MIL/AWG)	TORQUE CU LB-IN	KEY SIZE	WEIGHT KG	PACKAGE SIZE PCS
KLH2X150	...358580	2 x 300 – 1/0	390	Hex 17	0.26	3
KLH2X240	...358597	2 x 500 – 3/0	660	Hex 19	0.37	3
KLH2X300	...358603	2 x 600 – 300	660	Hex 19	0.49	3

We continuously improve our products; specifications, features and appearances may change without prior notice.

KL Terminal Blocks UL 1059

- UL conductors: 500 kcmil - 6 AWG
- IEC conductors: 2.5 - 240 mm2
- Available in grey, blue (N) and yellow/green (PE)
- Housing and cover in polyamide
- Terminal material tin-coated, greased aluminium
- For DIN-rail or base mounting
- UL 1059, CAN/CSA C22.2 No. 158-10

TYPE	EAN CODE 6419410...	VOLTAGE (V)	AMPERE AL (A)	AMPERE CU (A)	LINE/LOAD WIRE SIZE-STR CU/AL (KCMIL/AWG)	TORQUE AL/CU LB-IN	KEY SIZE	MOUNTING	WEIGHT KG	PACKAGE SIZE PCS
KL1X50	…378250	1000V	120A	150A	1/0 – 6	90 lb in	Hex 5	Screw / DIN	0.060	32
KL1X50N	…378267									
KL1X50PE	…378274									
KL2X50	…378281	1000V	240A	300A	1/0 – 6	90 lb in	Hex 5	Screw / DIN	0.104	18
KL2X50N	…378298									
KL1X95	…378311	1000V	155A	200A	3/0 – 4	110 lb in (1/0 – 4 AWG) / 200 lb in (3/0 – 2/0 AWG)	Hex 6	Screw / DIN	0.096	22
KL1X95N	…378328									
KL1X95PE	…378335									
KL2X95	…378342	1000V	360A	460A	4/0 – 4	110 lb in (1/0 – 4 AWG) / 200 lb in (4/0 – 2/0 AWG)	Hex 6	Screw / DIN	0.169	12
KL2X95N	…378359									
KL1X150	…378373	1000V	230A	285A	300 – 2	110 lb in (1/0 – 2 AWG) / 200 lb in (4/0 – 2/0 AWG) / 340 lb in (300 – 250 kcmil)	Hex 6	Screw / DIN	0.181	18
KL1X150N	…378380									
KL2X150	…378403	1000V	460A	570A	300 – 2	110 lb in (1/0 – 2 AWG) / 200 lb in (4/0 – 2/0 AWG) / 340 lb in (300 – 250 kcmil)	Hex 6	Screw / DIN	0.317	10
KL2X150N	…378410									
KL1X240	…378434	1000V	310A	380A	500 – 3/0	220 lb in (250 kcmil – 3/0 AWG) / 490 lb in (500 – 300 kcmil)	Hex 8	Screw / DIN	0.293	14
KL1X240N	…378441									
KL2X240	…378465	1000V	620A	760A	500 – 3/0	220 lb in (250 kcmil – 3/0 AWG) / 490 lb in (500 – 300 kcmil)	Hex 8	Screw / DIN	0.522	8
KL2X240N	…378472									

– = Grey, N = Blue, PE = Yellow/Green

We continuously improve our products; specifications, features and appearances may change without prior notice.

Accessories

Terminal Shrouds

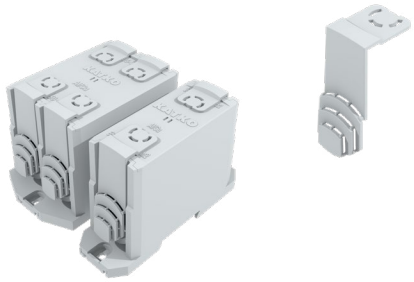

- Terminal shrouds for KL terminals
- Cut-outs for the general conductor sizes
- IP20

TYPE	DESCRIPTION	FOR	EAN CODE 6419410…	PACKAGE SIZE PCS
KLTS50	cut-outs for 2,5-10, 16-25 and 35-50 mm2 conductors	KL 50 mm2 terminal blocks (1x, 2x, 3x and 3x1x models)	... 260173	1
KLTS95	cut-outs for 16-25, 35-50 and 70-95 mm2 conductors	KL 95 mm2 terminal blocks (1x, 2x, 3x and 3x1x models)	... 260180	1
KLTS150	cut-outs for 25-50, 70-95 and 120-150 mm2 conductors	KL 150 mm2 terminal blocks (1x and 2x models)	...293874	1
KLTS240	cut-outs for 35-50, 70-120 and 150-240 mm2 conductors	KL 240 mm2 terminal blocks (1x and 2x models)	...293881	1
KLTS300	cut-outs for 95-120, 150-185 and 240-300 mm2 conductors	KL 300 mm2 terminal blocks (1x and 2x models)	...293898	1

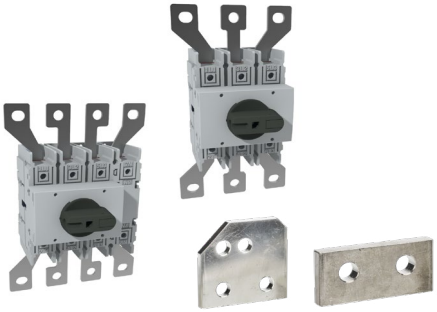

Spreaders

- For fitting cable connectors to switches

TYPE	DESCRIPTION	FOR	EAN CODE 6419410…	PACKAGE SIZE PCS
ALK3160	8 mm bolt, 1 package contains spreaders for all terminals of switch	EVA & VKA 125-160A 3-pole	...225301	1
ALK4160	8 mm bolt, 1 package contains spreaders for all terminals of switch	EVA & VKA 125-160A 4-pole	...225400	1
ALK800	13 mm bolt, 1 package contains 1 spreader	KU 800A, 3 & 4-pole	...205884	1
ALK800C	13 mm bolt , 1 package contains 1 spreader	KU 800A, 3-pole	...205877	1

Fixing Accessories

- For bolt mountable KKL connectors
- One package for 3- or 4-pole switches contains all necessary bolts, nuts and washers

TYPE	DESCRIPTION	FOR	EAN CODE 6419410...
M12PP3P	Fixing bolts for connectors	M12, 3 pole	...288368
M10PP3P	Fixing bolts for connectors	M10, 3 pole	...288351
M8PP3P	Fixing bolts for connectors	M8, 3 pole	...288344
M8PP4P	Fixing bolts for connectors	M8, 4 pole	...287804
M10PP4P	Fixing bolts for connectors	M10, 4 pole	...287811
M12PP4P	Fixing bolts for connectors	M12, 4 pole	...287828

We continuously improve our products; specifications, features and appearances may change without prior notice.

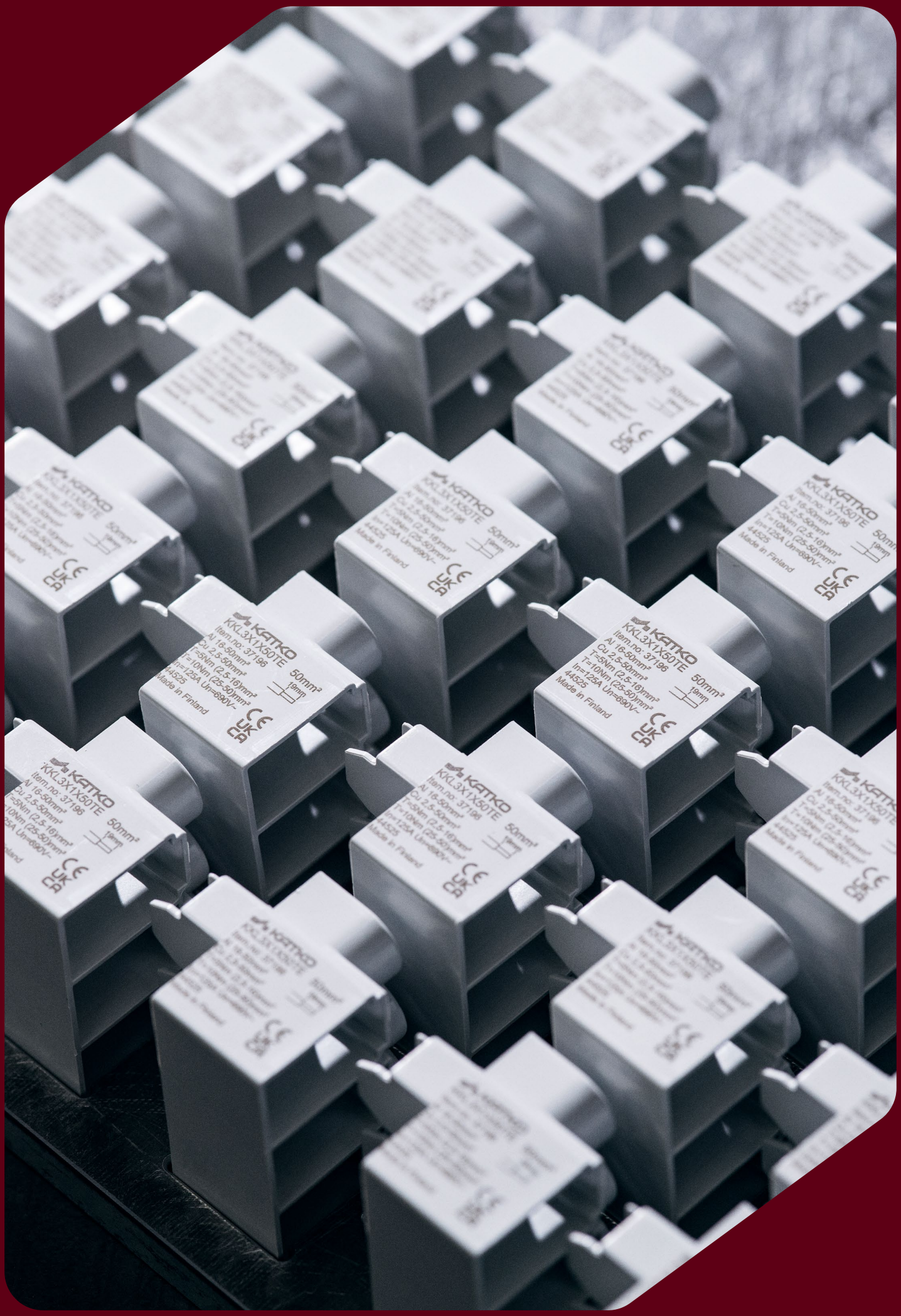
KATKO
KKL3X1X50TE
Item.no: 37196
Al 16-50mm²
Cu 2,5-50mm²
T=5Nm (2,5-16)mm²
T=10Nm (25-50)mm²
In=125A Un=690V~
44525
Made in Finland
50mm²
19mm

Dimensional Drawings
Terminal Blocks

KC1X16

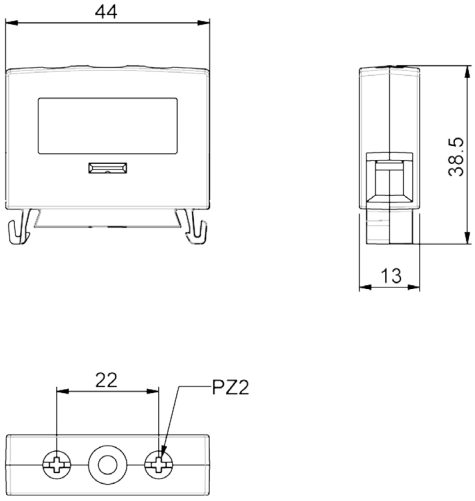

KC2X16

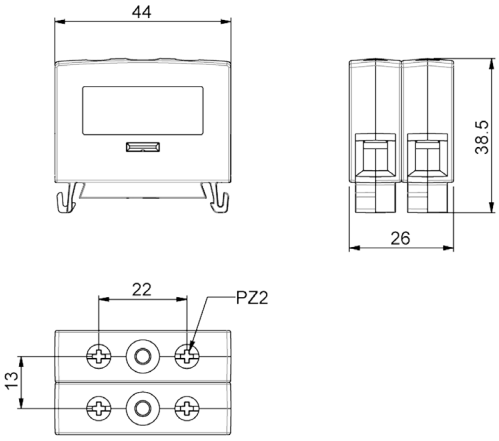

KC1X35

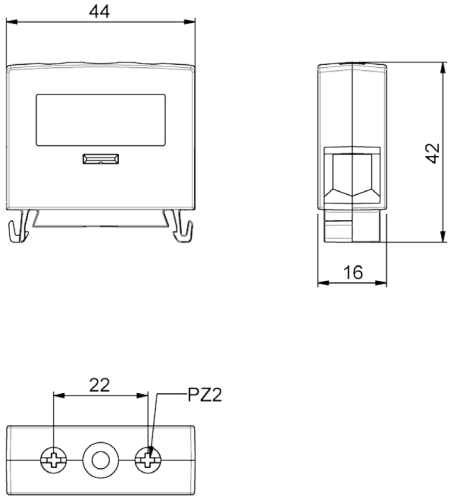

KC2X35

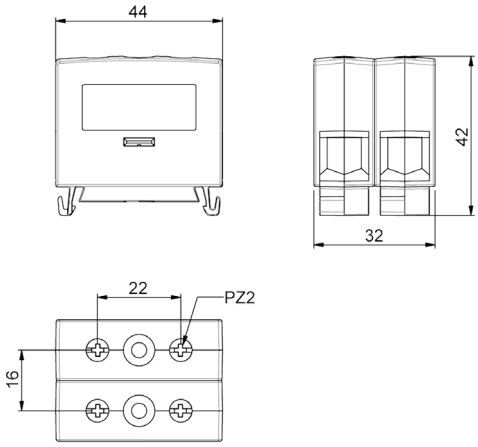

KL1X16

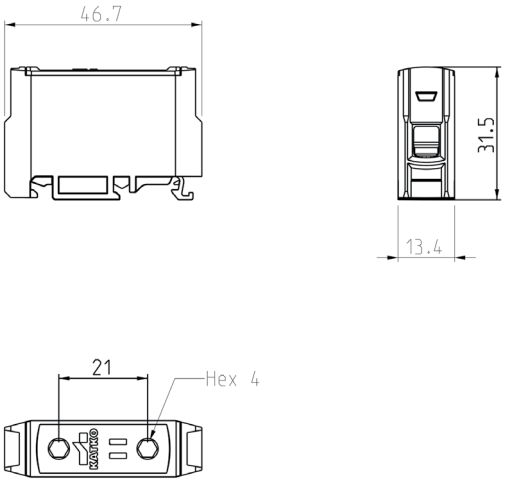

KL5X1X16

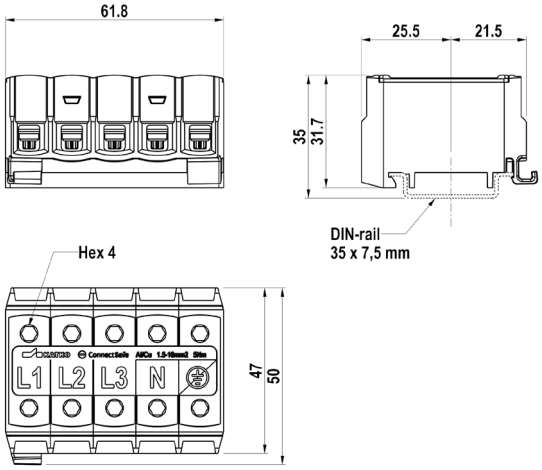

We continuously improve our products; specifications, features and appearances may change without prior notice.

KL1X50

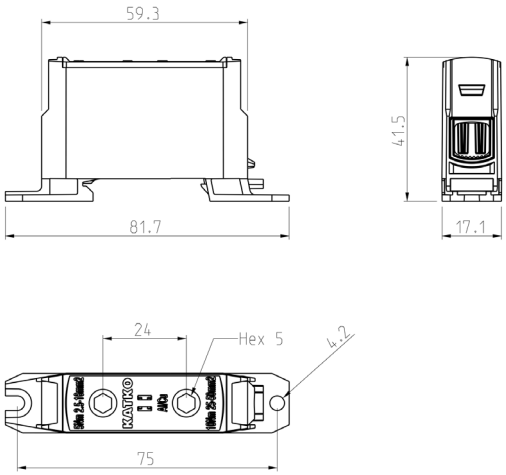

KL2X50

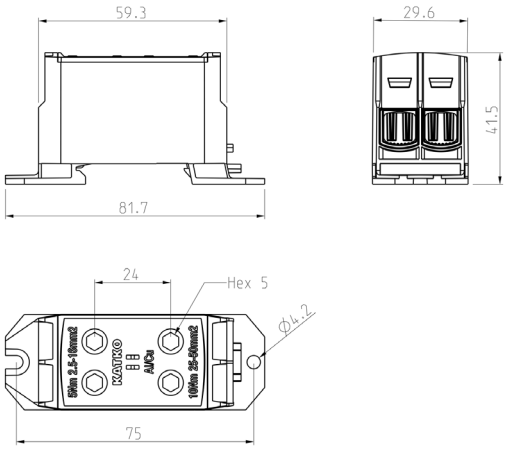

KL3X50 / 3X1X50

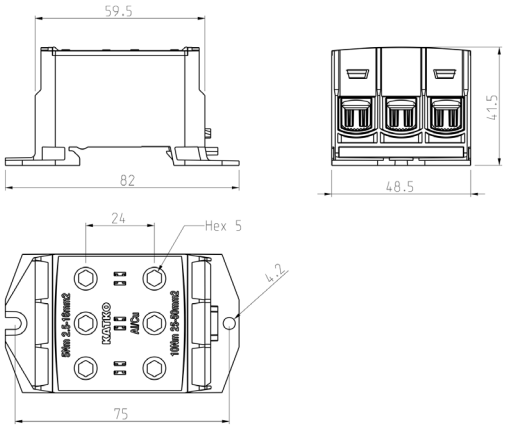

KL1X95

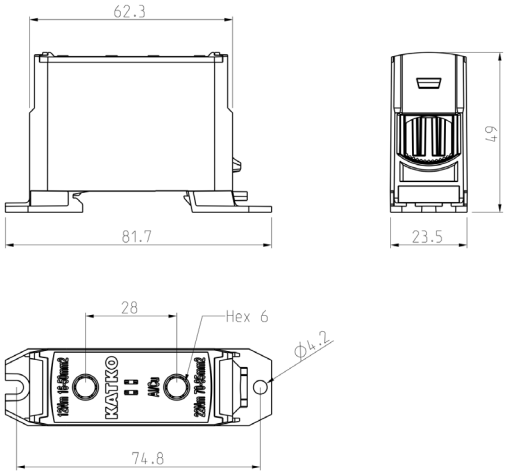

KL2X95

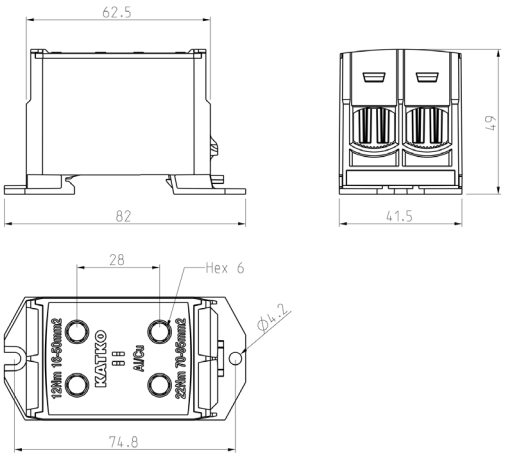

KL3X95 / 3X1X95

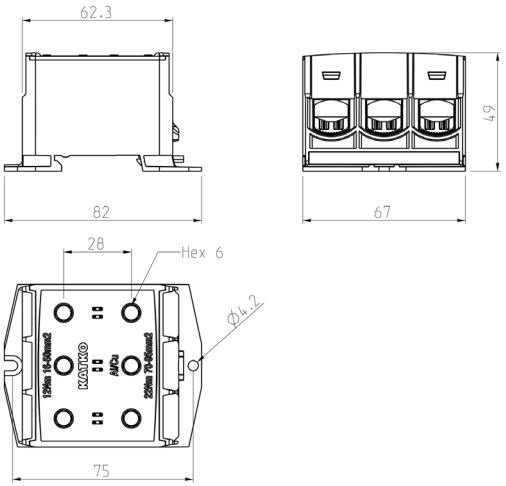

We continuously improve our products; specifications, features and appearances may change without prior notice.

KL1X150

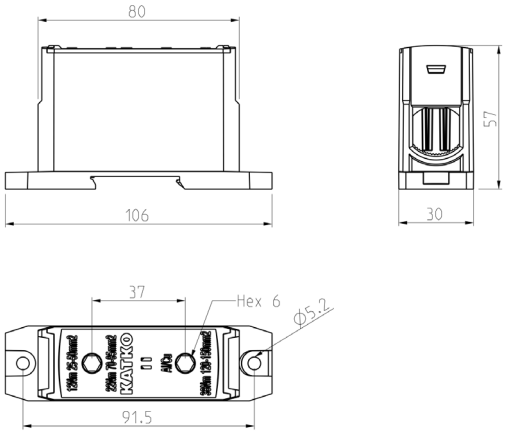

KL2X150

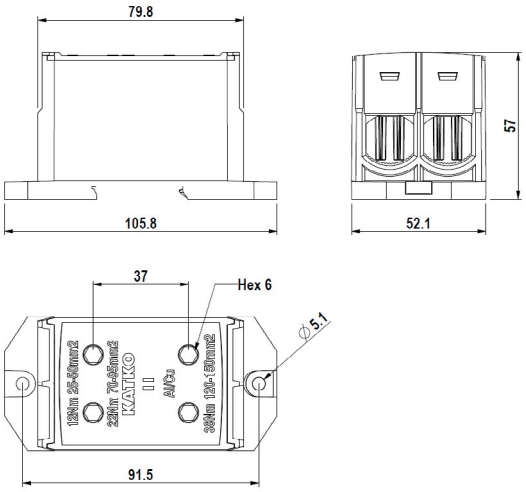

KL1X240

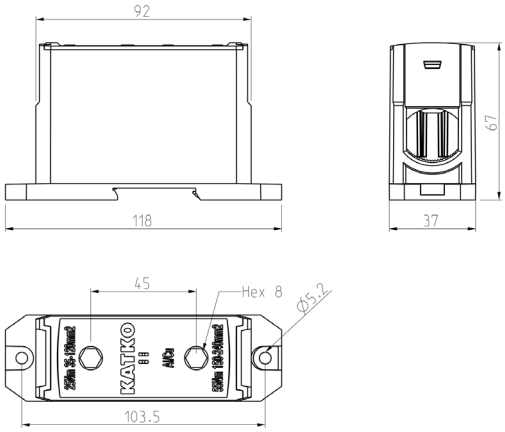

KL2X240

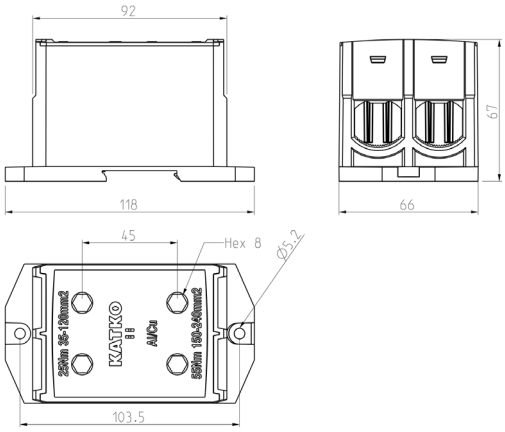

KL1X300

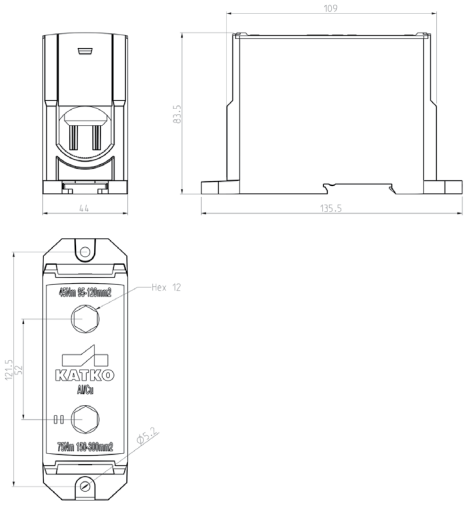

KL2X300

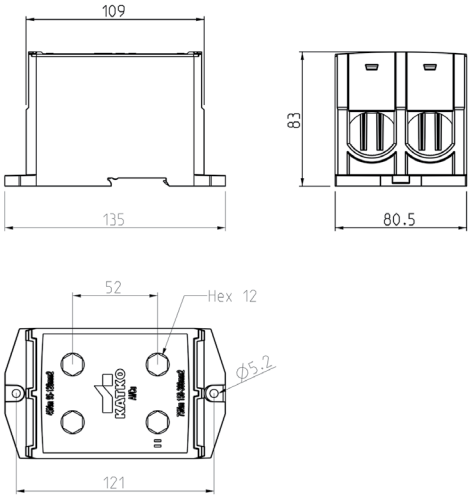

We continuously improve our products; specifications, features and appearances may change without prior notice.

Dimensional Drawings
Junction Boxes

KLM5X1X16 KCS1397PC V

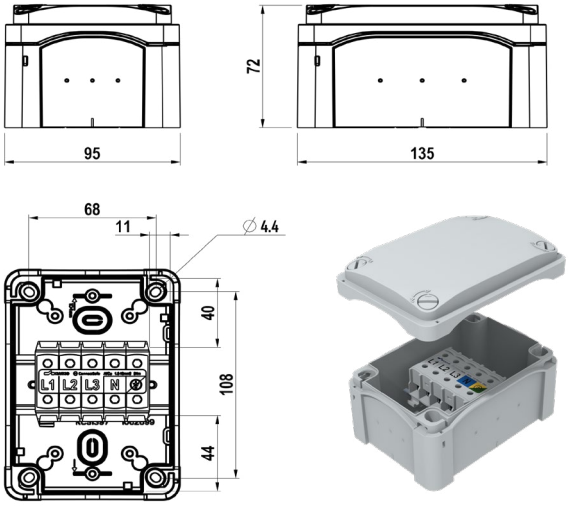

KLM5X1X16 KCS13137PC

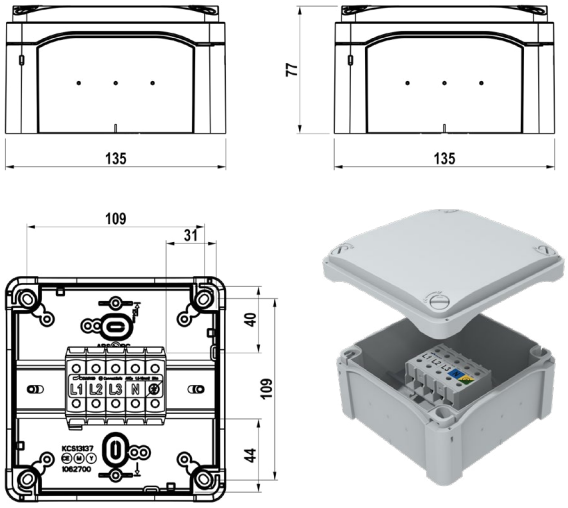

KLM5X1X16 KCS19139PC V

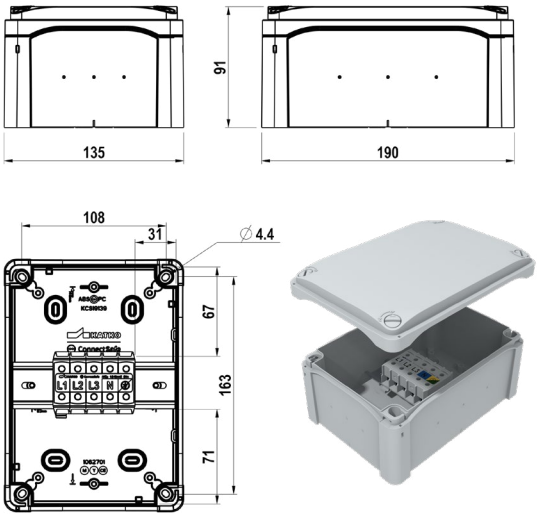

KLM5X1X16 KCS19139PC H

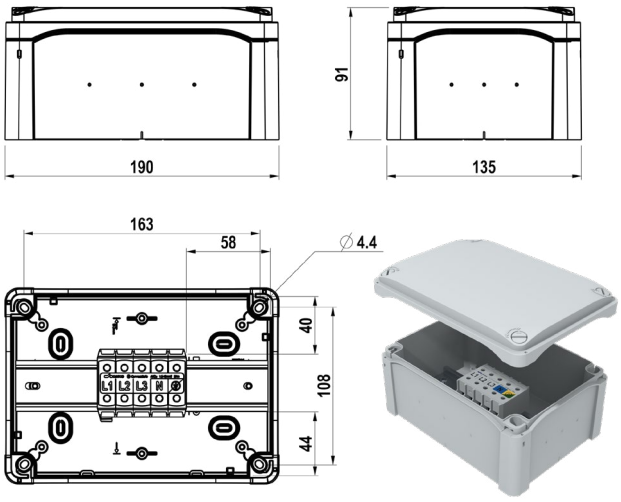

KLM5X1X16 KCS271910PC V

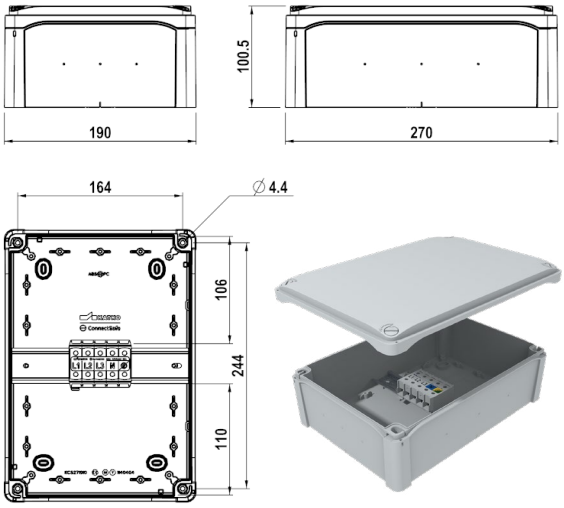

KLM5X1X16 KCS271910PC H

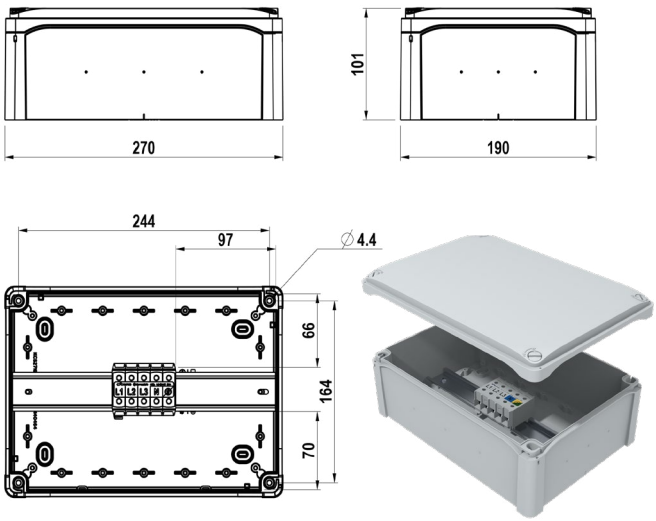

We continuously improve our products; specifications, features and appearances may change without prior notice.

KLM5X1X50 KCS271910PC V

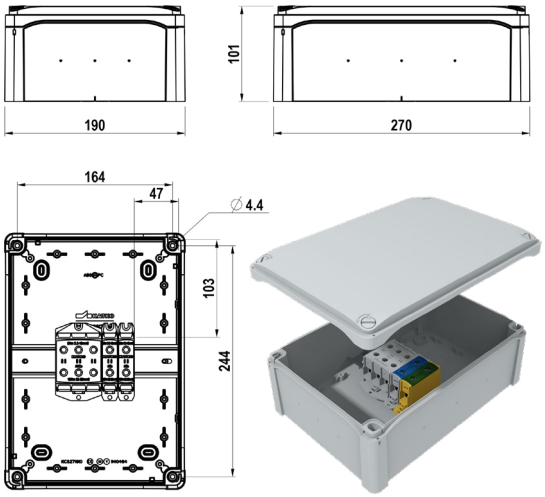

KLM2X16 M3 4XM32P

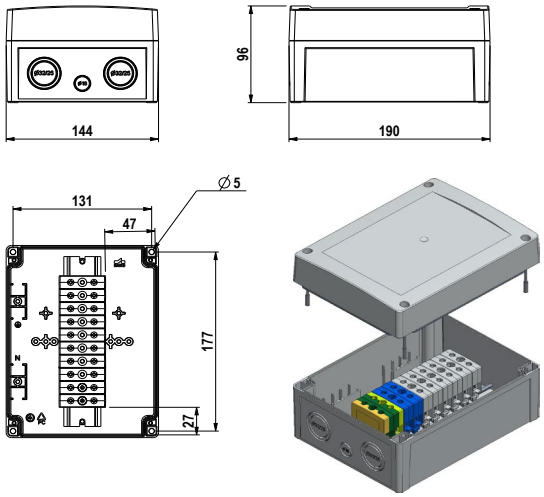

KLM1X50 M4 2XM40P

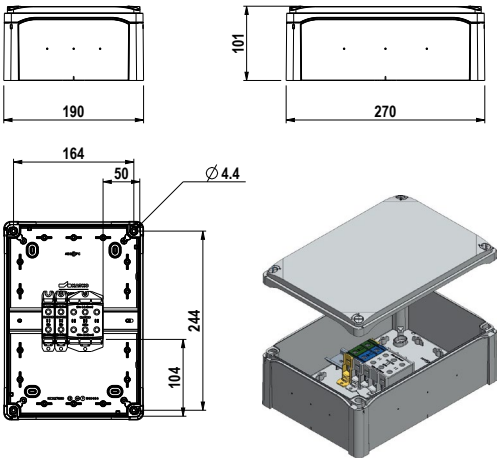

KLM2X50 M4 4XM40P

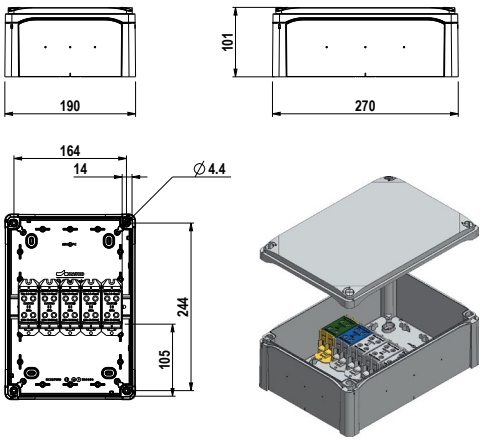

KLM1X95 MF01 2XM63P

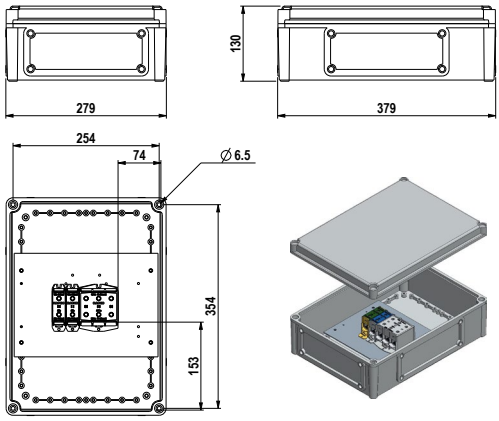

KLM2X95 MF01 4XM63P

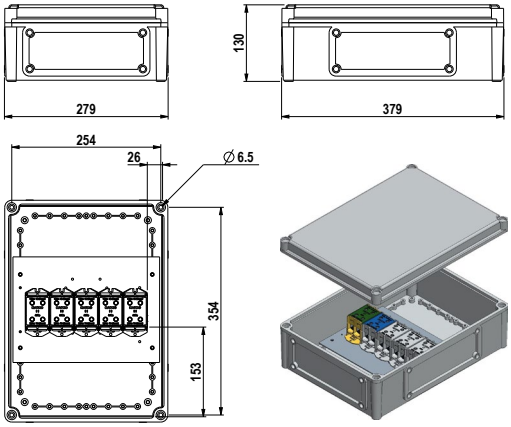

We continuously improve our products; specifications, features and appearances may change without prior notice.

KLM2X150 MF03 4XM63P

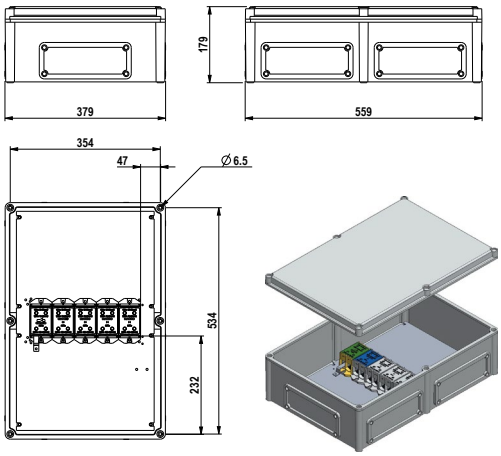

KLR2X16 RA4 4XM32M

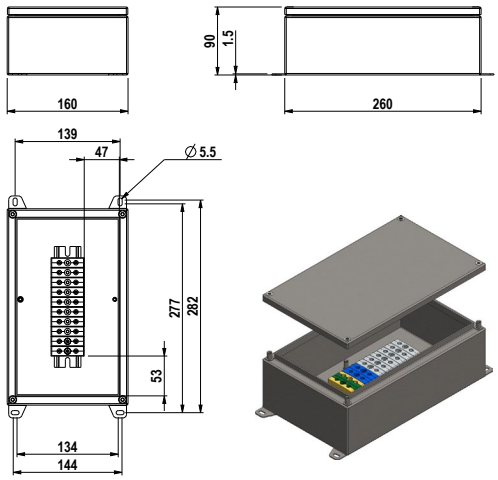

KLR1X50 RA4 2XM40M

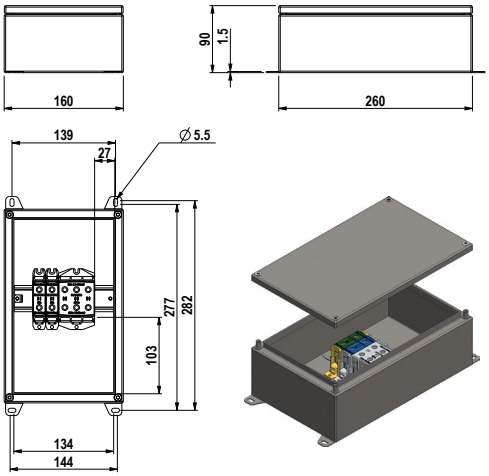

KLR2X50 RA4 4XM40M

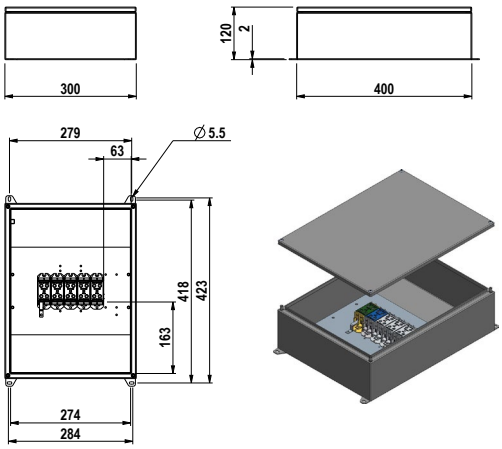

KLR1X95 RA5 2XM63M

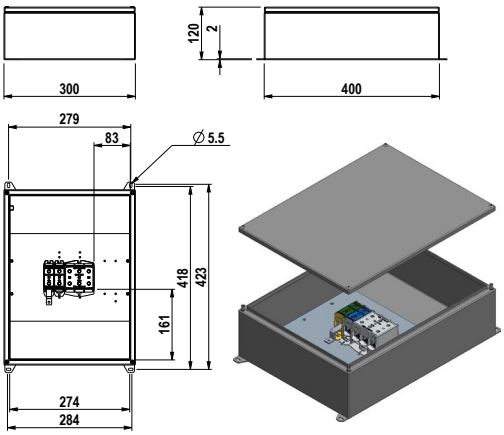

KLR2X95 RA5 4XM63M

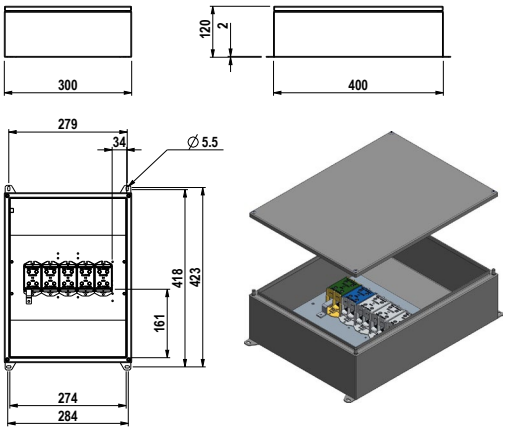

We continuously improve our products; specifications, features and appearances may change without prior notice.

Dimensional Drawings
Cable Connectors

KLR2X150 R6 4XM63LM

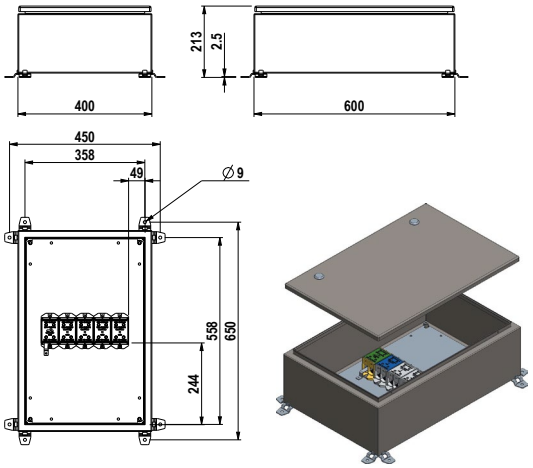

KKL1X16

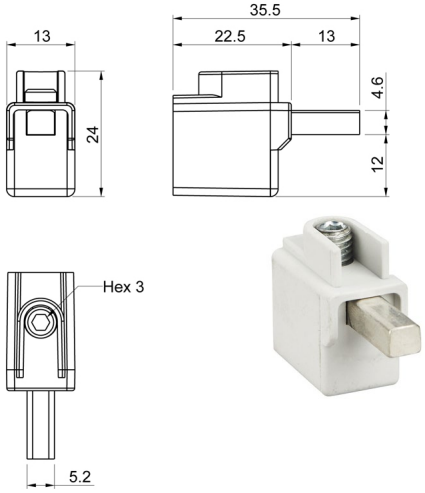

KKL1X50T1

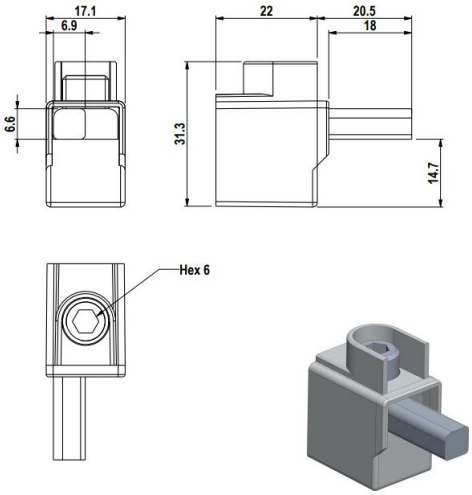

KKL1X50T2

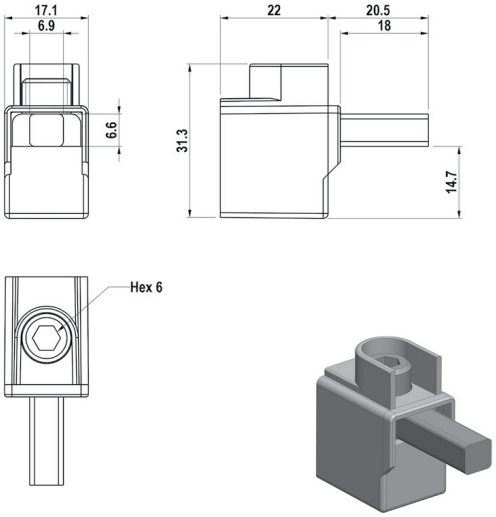

KKL1X50T3

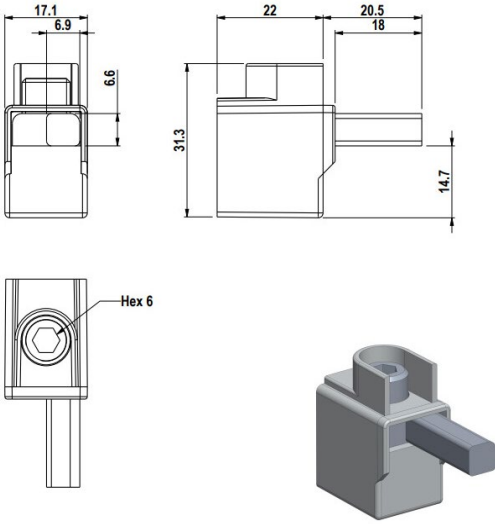

KKL1X50M

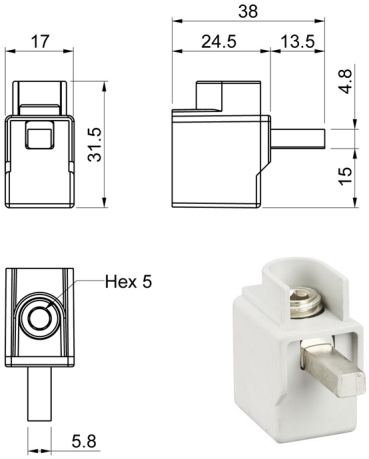

We continuously improve our products; specifications, features and appearances may change without prior notice.

KKL2X50M

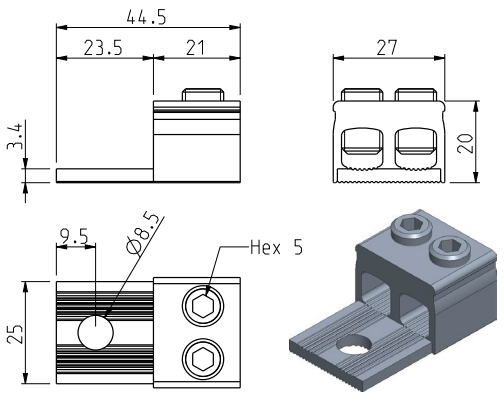

KKL1X50N

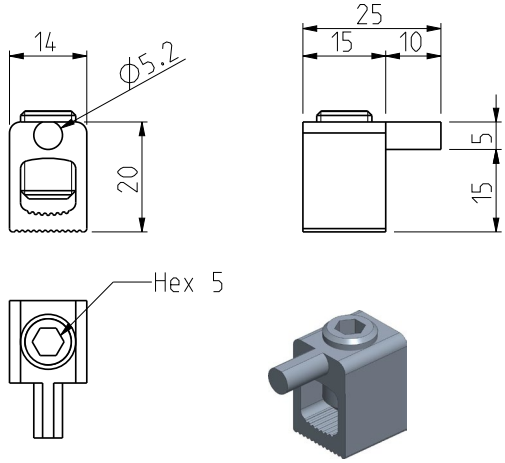

KKL1X50

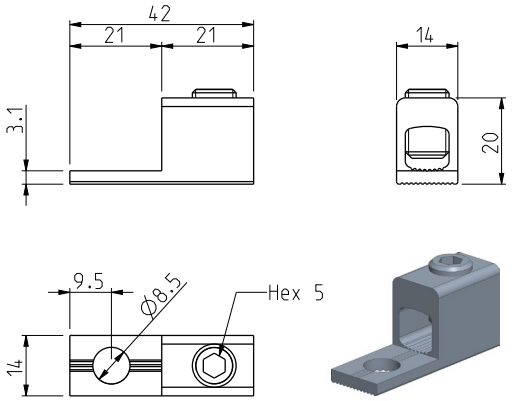

KKL2X50

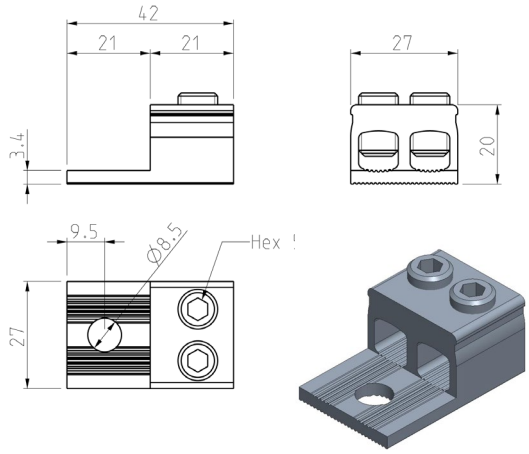

KKL3X1X50TE

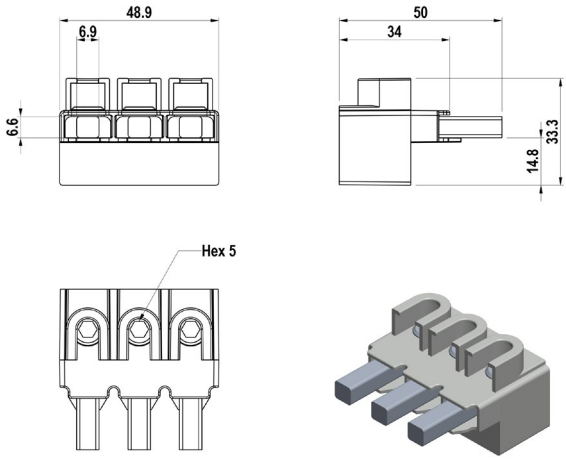

KKL4X1X50TE

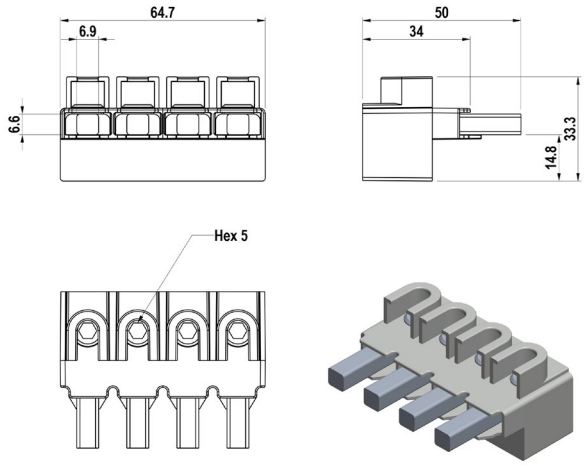

We continuously improve our products; specifications, features and appearances may change without prior notice.

KKL1X95

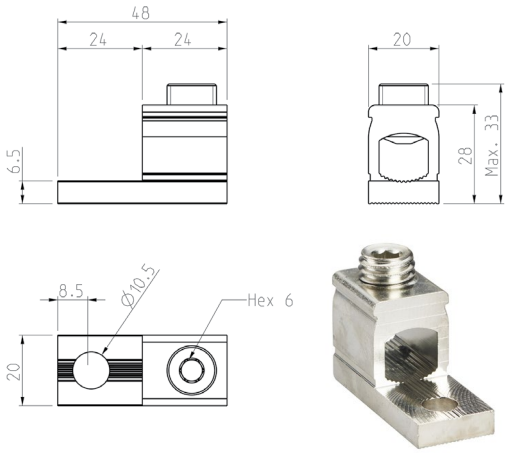

KKL2X95

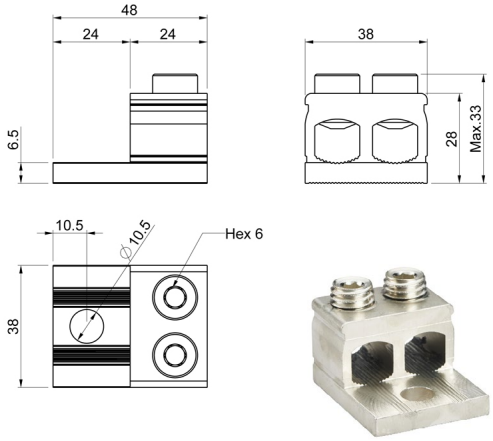

KKL2X95LR

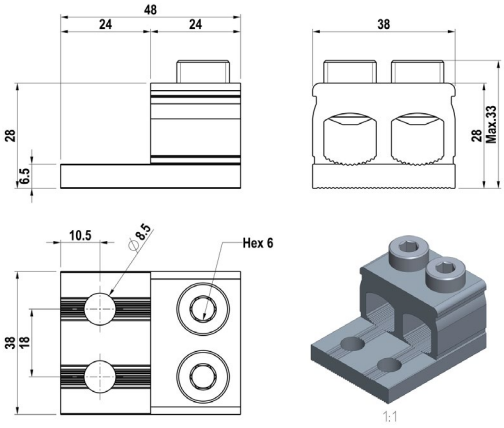

KKL1X95M

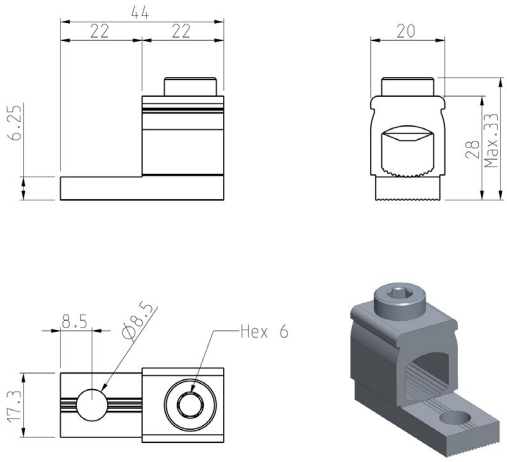

KKL1X120T1

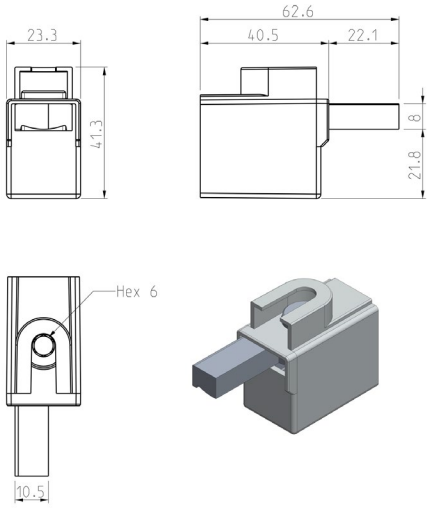

KKL1X120T2

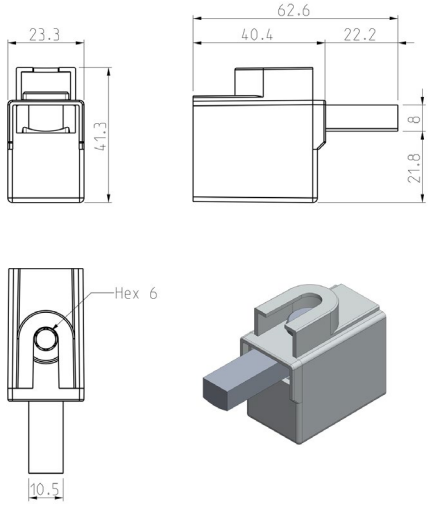

We continuously improve our products; specifications, features and appearances may change without prior notice.

KKL1X120T3

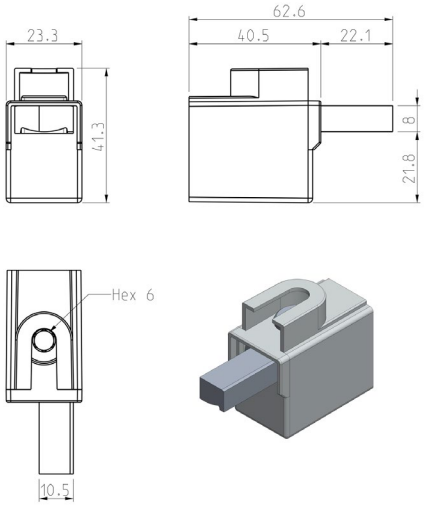

KKL1X120T

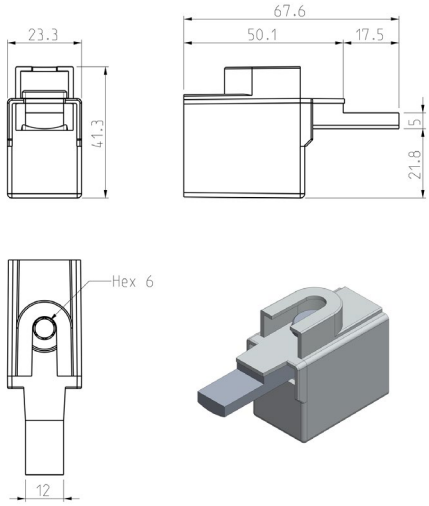

KKL1X120TM

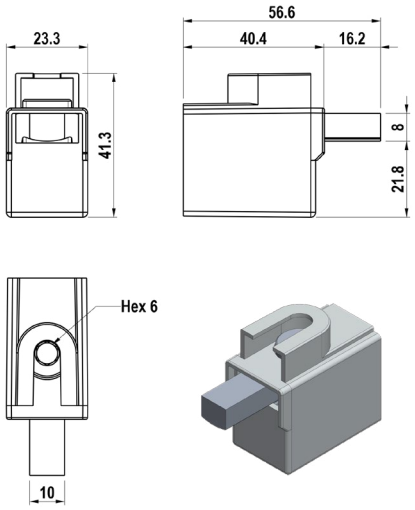

KKL1X120RS

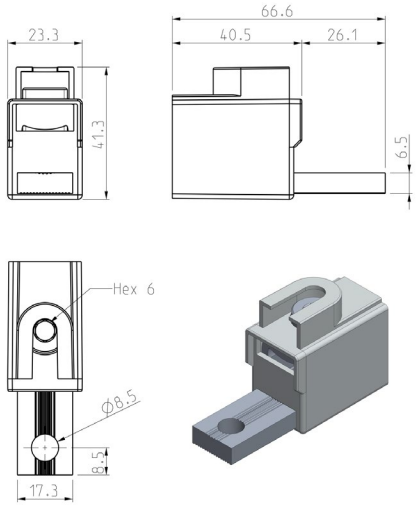

KKL1X120RSY

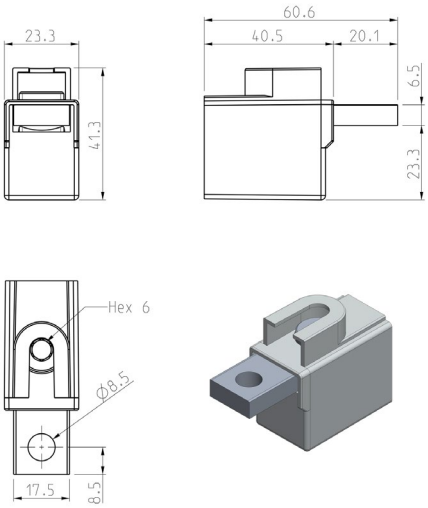

KKL1X150

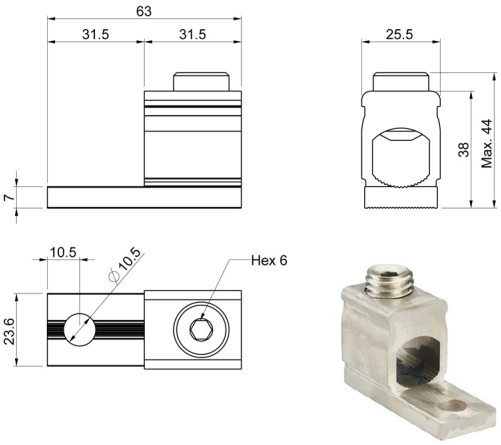

We continuously improve our products; specifications, features and appearances may change without prior notice.

KKL1X150T2

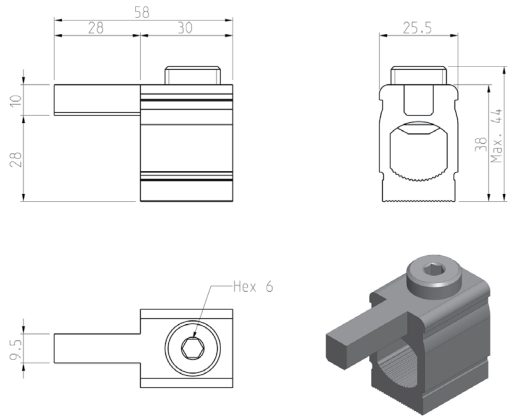

KKL2X150

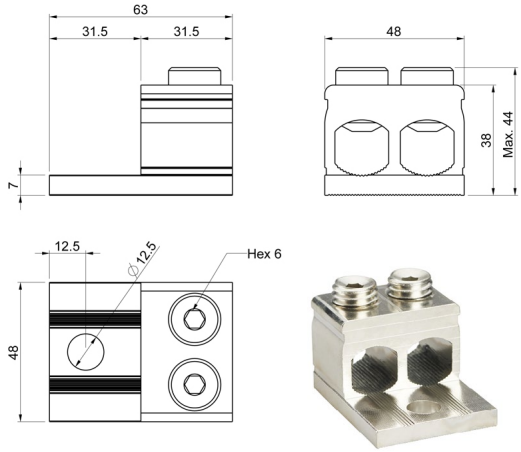

KKL2X150M10

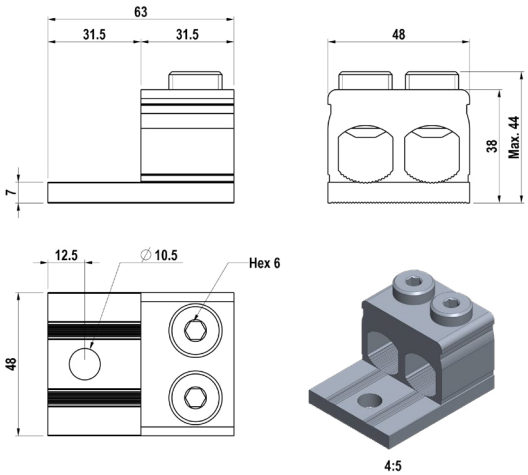

KKL2X150LR

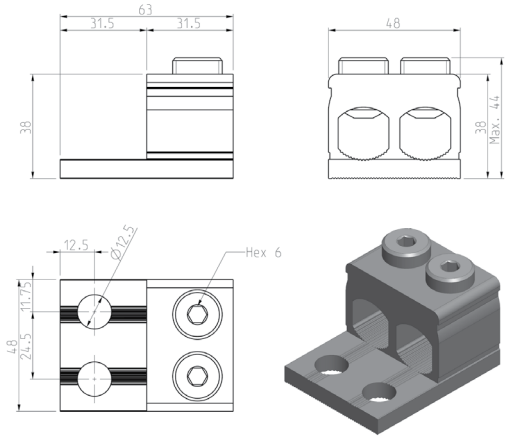

KKL2X150LRM10

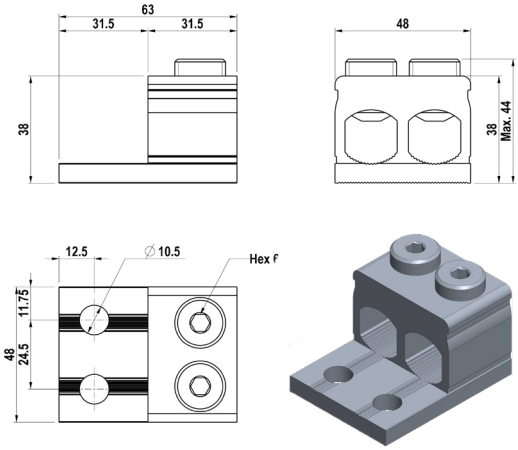

KKL1X240

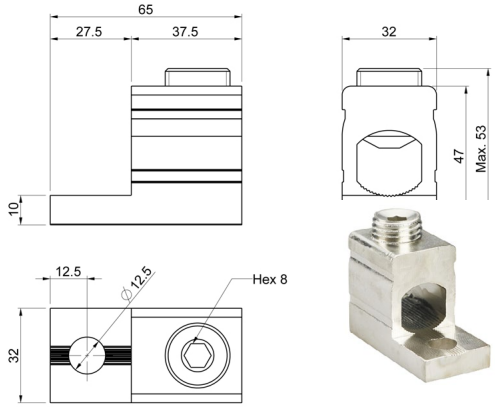

We continuously improve our products; specifications, features and appearances may change without prior notice.

KKL1X240AR250

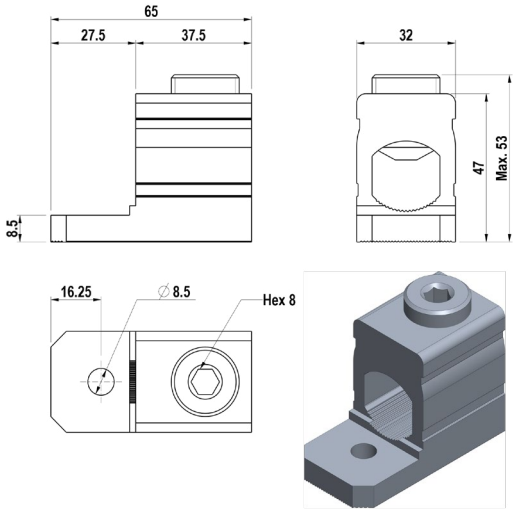

KKL2X240

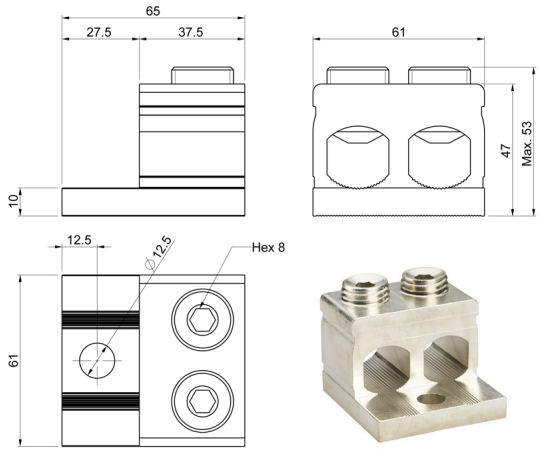

KKL1X240TE

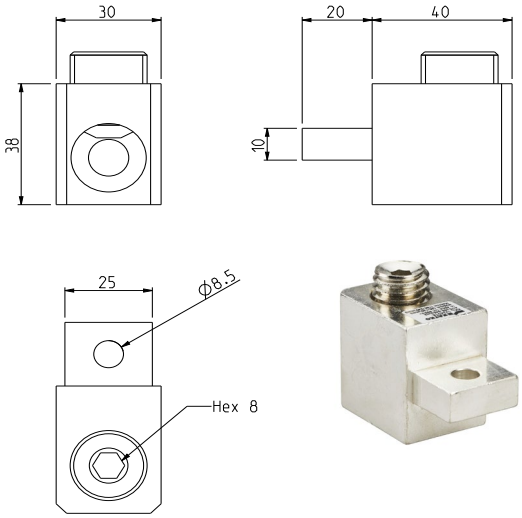

KKL1X240TM

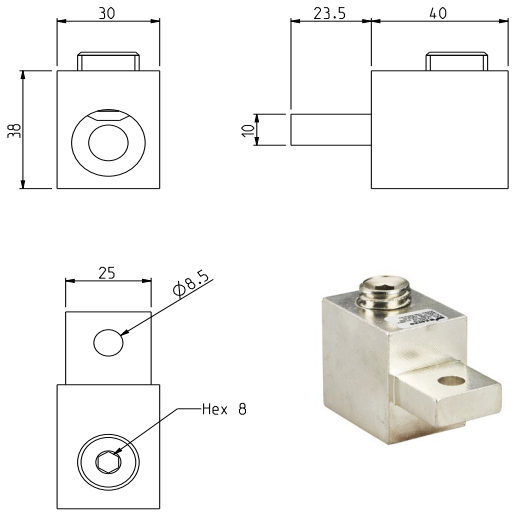

KKL2X240LR

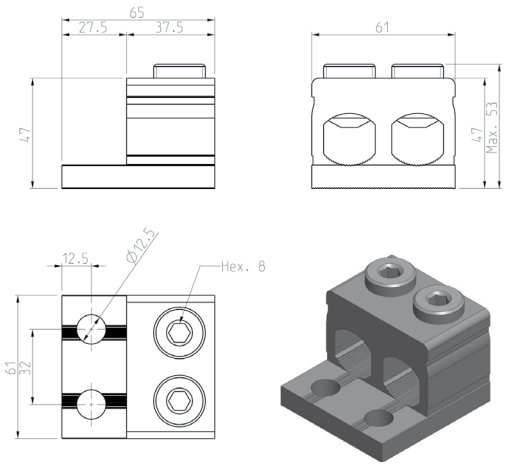

KKL1X300

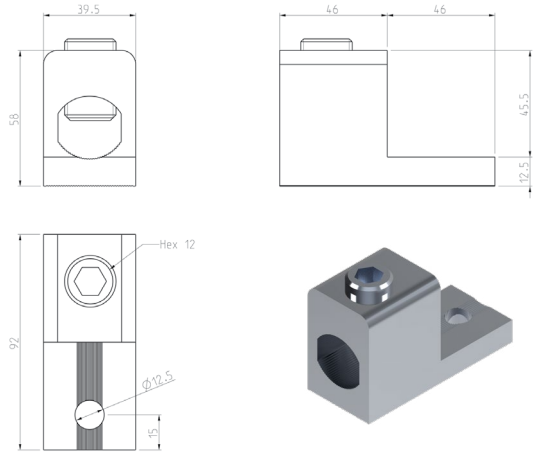

We continuously improve our products; specifications, features and appearances may change without prior notice.

KKL1X300AR400

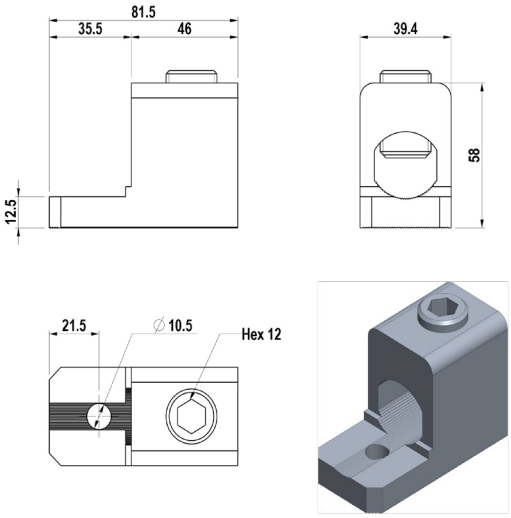

KKL2X300

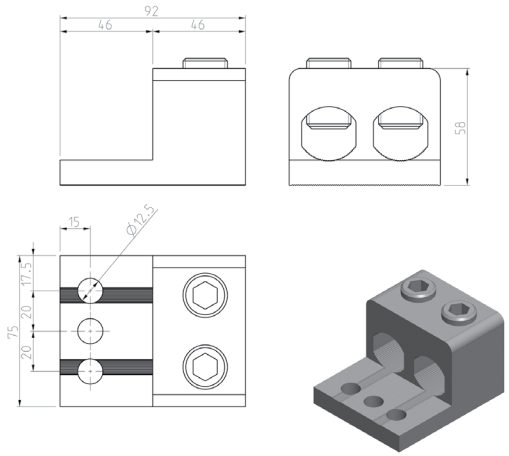

KKL2X150VM

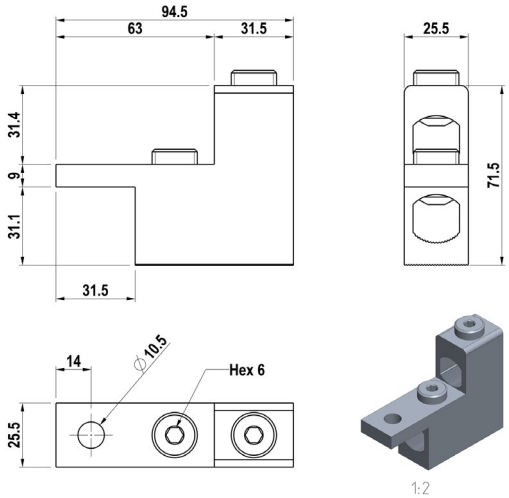

KKL2X150VB

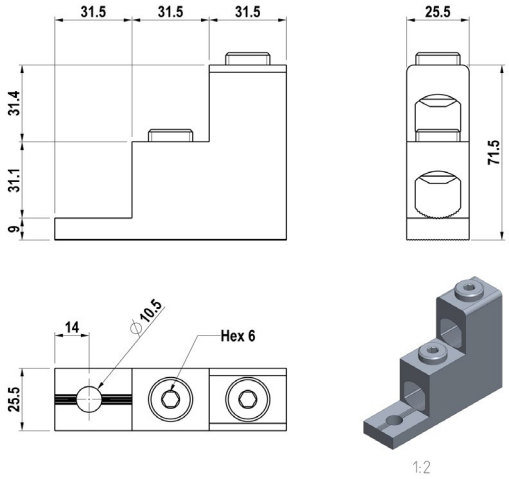

KKL2X240VM

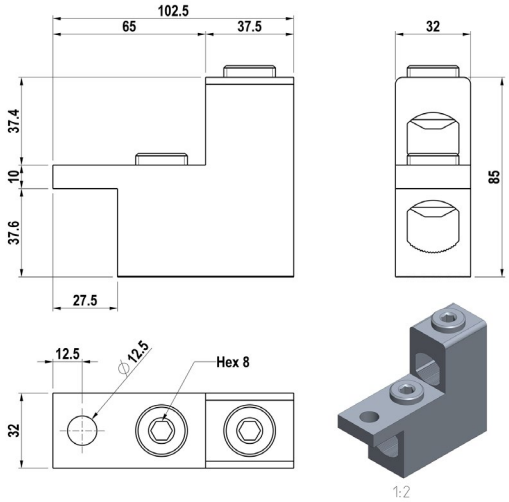

KKL2X240VB

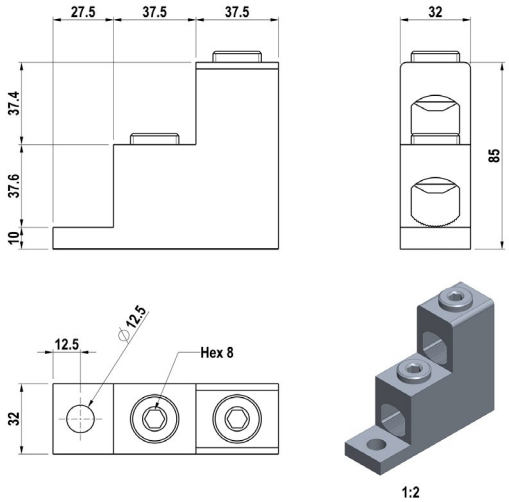

We continuously improve our products; specifications, features and appearances may change without prior notice.

KKL2X300VM

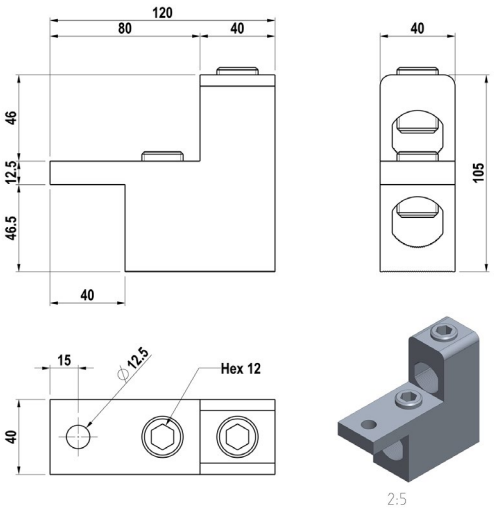

KKL2X300VB

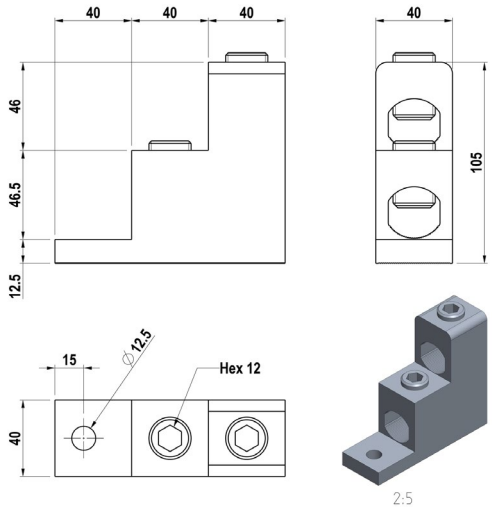

KLH2X150

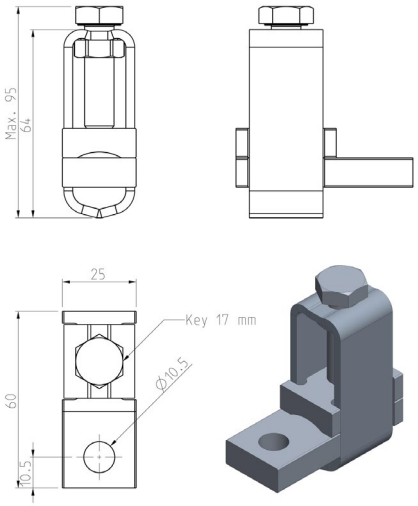

KLH2X240

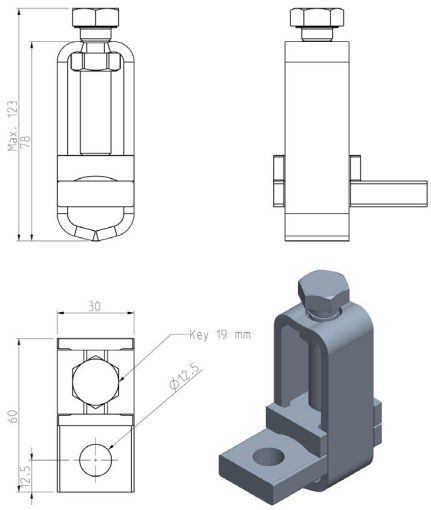

KLH2X300

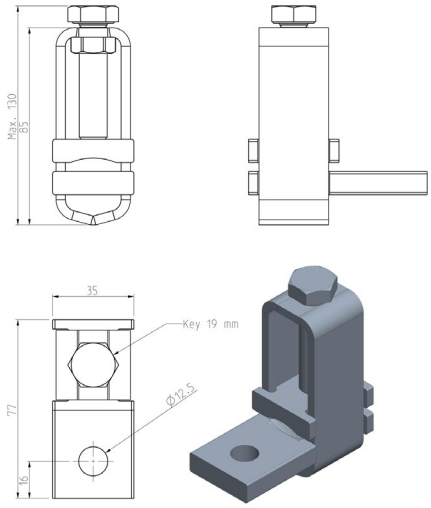

We continuously improve our products; specifications, features and appearances may change without prior notice.

Dimensional Drawings
Spreaders

ALK800

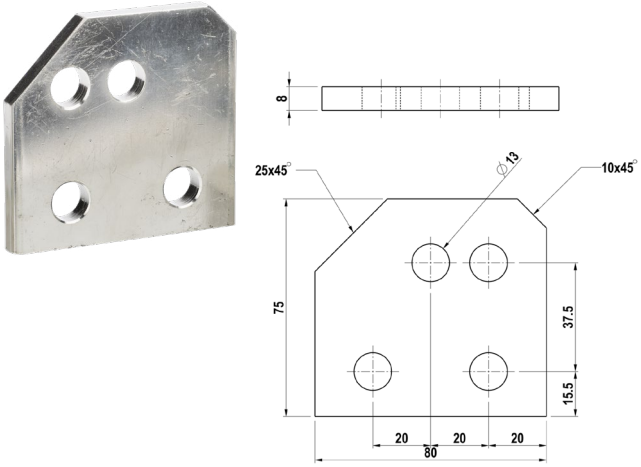

ALK800C

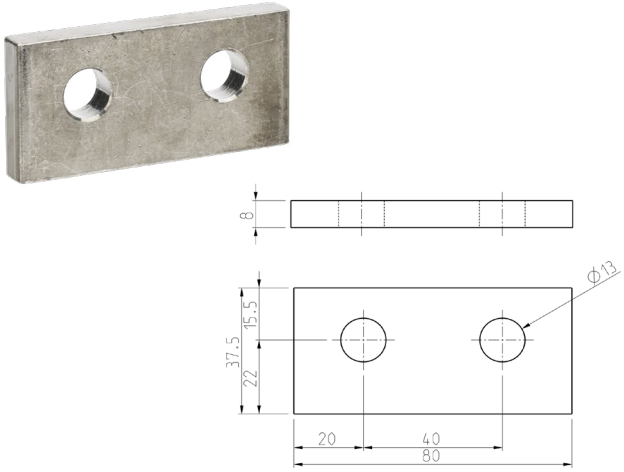

ALK3160 (model installation)

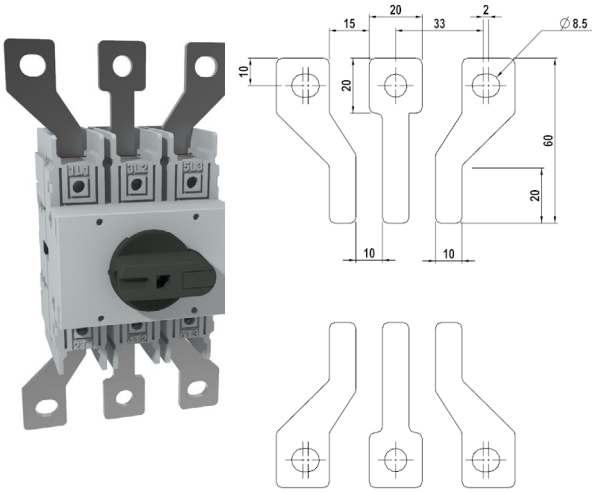

ALK4160 (model installation)

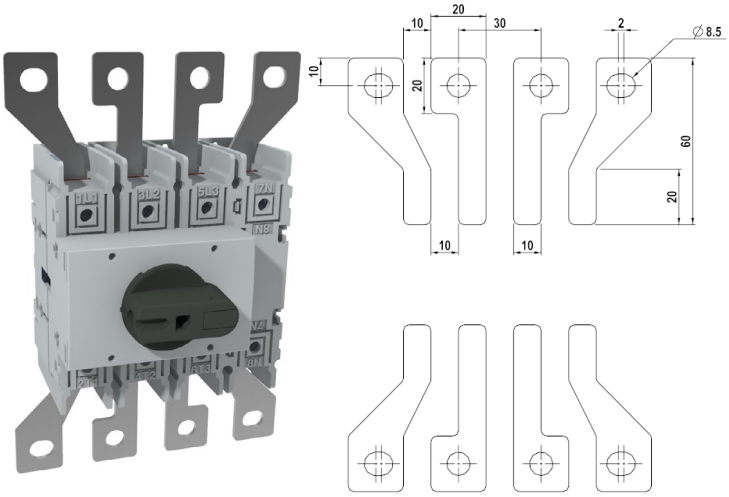

We continuously improve our products; specifications, features and appearances may change without prior notice.

Dimensional Drawings
Terminal Shrouds

KLTS50

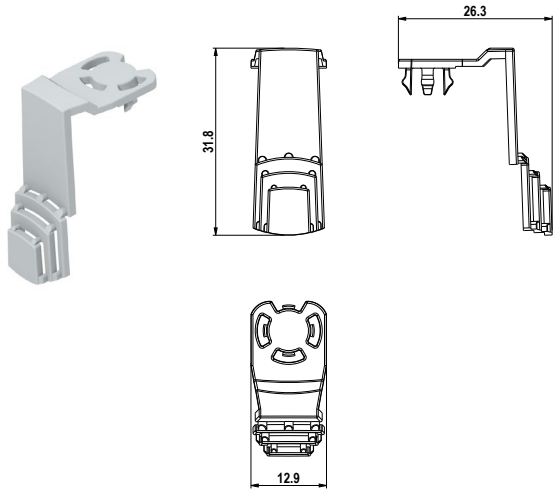

KLTS95

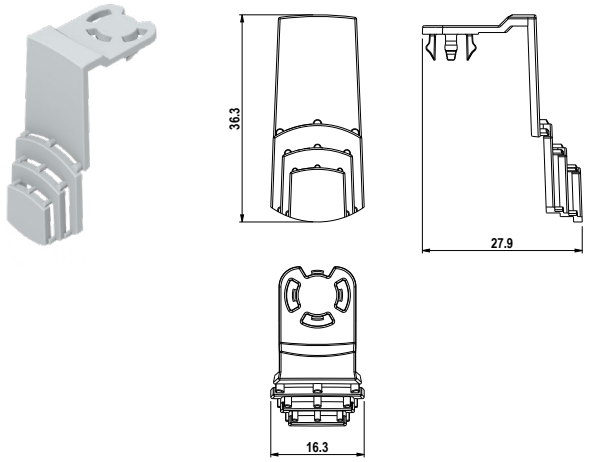

KLTS150

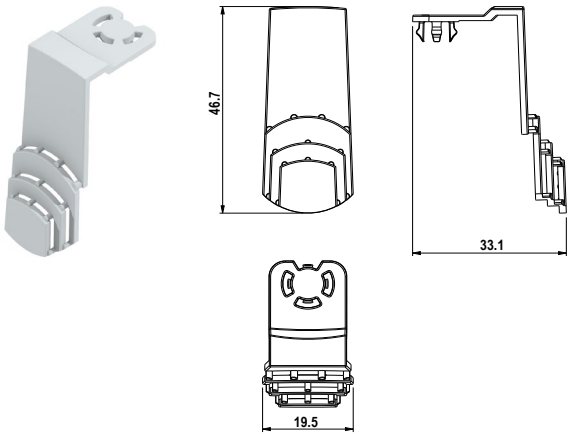

KLTS240

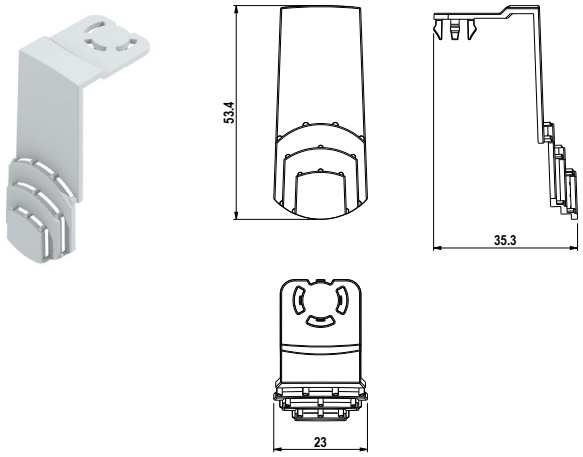

KLTS300

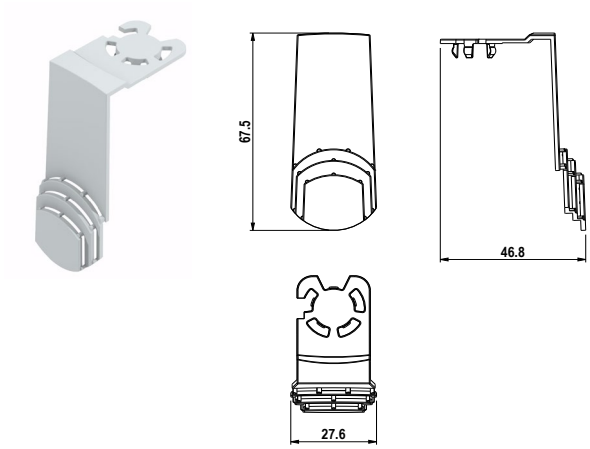

We continuously improve our products; specifications, features and appearances may change without prior notice.

Number of Conductors Simultaneously Connectable to the Terminal

					Cross section (mm²)/ number of conductors simultaneously connectable to the terminal															
	Type	In [A]	Torque [Nm]		1,5	2,5	4	6	10	16	25	35	50	70	95	120	150	185	240	300
KL	1X16*	75	5 Nm (2,5-16 mm²)	Al	-	1	1	1	1	1	-	-	-	-	-	-	-	-	-	-
		76		Cu	3	3	3	2	1	1										
	1X50* 3X50* 3X1X50*	160	5Nm (2,5-16mm²) 10Nm (25-50mm²)	Al	-	1	1	1	1	1	1	1	1	-	-	-	-	-	-	-
				Cu		3	3	3	3	2	1	1**	1							
	2X50*	200	5Nm (2,5-16mm²) 10Nm (25-50mm²)	Al	-	1	1	1	1	1	1	1	1	-	-	-	-	-	-	-
		320		Cu		3	3	3	3	2	1	1**	1							
	1X95* 3X95* 3X1X95*	200	12Nm (6-50mm²) 22Nm (70-95mm²)	Al	-	-	-	1	1	1	1	1	1	1	1	-	-	-	-	-
		245		Cu				3	3	3	2	2	1	1**	1					
	2X95*	400	12Nm (6-50mm²) 22Nm (70-95mm²)	Al	-	-	-	1	1	1	1	1	1	1	1	-	-	-	-	-
		490		Cu				3	3	3	2	2	1	1**	1					
	1X150*	250	12Nm (25-50mm²) 22Nm (70-95mm²) 38Nm (120-150mm²)	Al	-	-	-	-	-	-	1	1	1	1	1	1	1	-	-	-
		320		Cu							3	3	2	1	1	1**	1			
	2X150*	500	12Nm (25-50mm²) 22Nm (70-95mm²) 38Nm (120-150mm²)	Al	-	-	-	-	-	-	1	1	1	1	1	1	1	-	-	-
		640		Cu							3	3	2	1	1	1**	1			
	1X240*	315	25Nm (35-120mm²) 55Nm (150-240mm²)	Al	-	-	-	-	-	-	-	1	1	1	1	1	1	1	1	-
		425		Cu								3	3	2	1	1	1	1**	1	
	2X240*	630	25Nm (35-120mm²) 55Nm (150-240mm²)	Al	-	-	-	-	-	-	-	1	1	1	1	1	1	1	1	-
		850		Cu								3	3	2	1	1	1	1**	1	
	1X300*	400	45 Nm (95-120 mm²) 75 Nm (150-300 mm²)	Al	-	-	-	-	-	-	-	-	-	-	1	1	1	1	1	1
		520		Cu											2	2	1	1	1**	1
	2X300*	800	45 Nm (95-120 mm²) 75 Nm (150-300 mm²)	Al	-	-	-	-	-	-	-	-	-	-	1	1	1	1	1	1
		1040		Cu											2	2	1	1	1**	1

					Cross section (mm²)/ number of conductors simultaneously connectable to the terminal															
	Type	In [A]	Torque [Nm]		1,5	2,5	4	6	10	16	25	35	50	70	95	120	150	185	240	300
KLH	2X150	455	44 Nm (50-150 mm²)	Al	-	-	-	-	-	-	-	-	1	1	1	1	1	-	-	-
		579		Cu									2	1	1	1	1			
	2X240	631	75 Nm (95-240 mm²)	Al	-	-	-	-	-	-	-	-	-	-	1	1	1	1	1	-
		806		Cu											2	2	1	1	1	
	2X300	810	75 Nm (185-300 mm²)	Al	-	-	-	-	-	-	-	-	-	-	-	-	-	1	1	1
		1035		Cu														1	1	1

* N = Blue = only for one neutral conductor

* PE = Yellow/green = only for one protective conductor

* P = Red

* M = Black

** Biggest fine-strand conductors

Cu conductors may be solid, multi-strand or fine-strand conductors. With fine strand conductors use of cable end sleeve is recommended but not required.

We continuously improve our products; specifications, features and appearances may change without prior notice.

					Cross section (mm²)/ number of conductors simultaneously connectable to the terminal															
	Type	In [A]	Torque [Nm]		1,5	2,5	4	6	10	16	25	35	50	70	95	120	150	185	240	300
KKL	1X16	63	2,2Nm (1,5-16mm²)	Al	1	1	1	1	1	1	–	–	–	–	–	–	–	–	–	–
				Cu	3	3	3	2	1**	1										
	1X50 / 1X50N / 1X50M / 1X50T1 / 1X50T2 / 1X50T3	160	5Nm (2,5-16mm²) 10Nm (25-50mm²)	Al	–	–	–	–	–	1	1	1	1	–	–	–	–	–	–	–
		160		Cu	–	3	3	3	3	2	1	1**	1	–	–	–	–	–	–	–
	2X50 2X50M	200	5Nm (2,5-16mm²) / 10Nm (25-50mm²)	Al	–	1	1	1	1	1	1	1	1	–	–	–	–	–	–	–
		320		Cu	–	3	3	3	3	2	1	1**	1	–	–	–	–	–	–	–
	1X95 1X95M	200	12Nm (6-50mm²) 22Nm (70-95mm²)	Al	–	–	–	1	1	1	1	1	1	1	1	–	–	–	–	–
		245		Cu	–	–	–	3	3	3	2	2	1	1**	1	–	–	–	–	–
	2X95 2X95LR	400	12Nm (6-50mm²) 22Nm (70-95mm²)	Al	–	–	–	1	1	1	1	1	1	1	1	–	–	–	–	–
		490		Cu	–	–	–	3	3	3	2	2	1	1**	1	–	–	–	–	–
	1X120 / 1X120RS / 1X120RSY / 1X120T / 1X120T1 / 1X120T2 / 1X120T3 / 1X120TM	200	12Nm (16-50mm²) 22Nm (70-120mm²)	Al	–	–	–	–	–	1	1	1	1	1	1	1	–	–	–	–
		245		Cu	–	–	–	–	–	3	2	2	1	1**	1	1	–	–	–	–
	1X150 / 1X150T2	250	12Nm (25-50mm²) 22 Nm (70-95 mm²) 38Nm (120-150mm²)	Al	–	–	–	–	–	–	1	1	1	1	1	1	1	–	–	–
		320		Cu							3	3	2	1	1	1**	1			
	2X150 / 2X150VB / 2X150VM / 2X150LR	500	12 Nm (25-50 mm²) 22 Nm (70-95 mm²) 38 Nm (120-150 mm²)	Al	–	–	–	–	–	–	1	1	1	1	1	1	1	–	–	–
		640		Cu	–	–	–	–	–	–	3	3	2	1	1	1**	1	–	–	–
	1X240 / 1X240TM / 1X240TE	315	25Nm (35-120mm²) 55Nm (150-240mm²)	Al	–	–	–	–	–	–	–	1	1	1	1	1	1	1	1	–
		425		Cu								3	3	2	1	1	1	1**	1	
	2X240 / 2X240MB / 2X240VB / 2X240VM / 2X240LR	630	25Nm (35-120mm²) 55Nm (150-240mm²)	Al	–	–	–	–	–	–	–	1	1	1	1	1	1	1	1	–
		850		Cu	–	–	–	–	–	–	–	3	3	2	1	1	1	1**	1	–
	1X300	400	45 Nm (95-120 mm²) 75 Nm (150-300 mm²)	Al	–	–	–	–	–	–	–	–	–	–	1	1	1	1	1	1
		520		Cu											2	2	1	1	1**	1
	2X300 2X300VB 2X300VM	800	45 Nm (95-120 mm²) 75 Nm (150-300 mm²) 45 Nm (95-120 mm²) 75 Nm (150-300 mm²) 45 Nm (95-120 mm²) 75 Nm (150-300 mm²)	Al	–	–	–	–	–	–	–	–	–	–	1	1	1	1	1	1
		1040		Cu	–	–	–	–	–	–	–	–	–	–	2	2	1	1	1**	1

** Biggest fine-strand conductors

Cu conductors may be solid, multi-strand or fine-strand conductors. With fine strand conductors use of cable end sleeve is recommended but not required.

We continuously improve our products; specifications, features and appearances may change without prior notice.

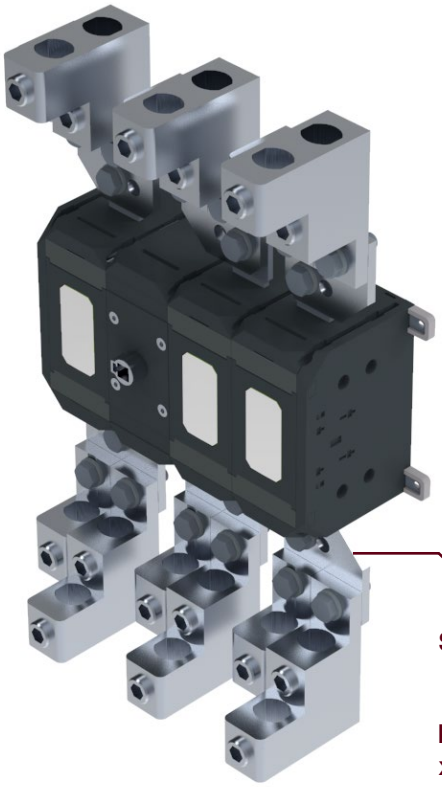

KATKO Switches and Cable Connectors Compatibility Table

- Following tables show compatibility of KATKO switches and cable connectors and most common combinations
- With spreaders it is possible to mount different combinations of connectors and switches that are not shown in these tables. Ask your local sales person for more information.

SPREADER (ALK800)

KU 3800 + 3 x KKL2X300VB (TOP) + 3 x KKL1X300 (TOP) + 3 x KKL2X300VB (BOTTOM) + 3 x KKL1X300 (BOTTOM)

SWITCH	KU								
A	16 - 40 (3-POLE)	16 - 40 N (3-POLE)	16 - 40 N (4-POLE)	63 - 80 & 125 N (3-POLE)	63 - 80 & 125 N (4-POLE)	100 - 160 (3-POLE)	160P + 200 - 250	315 - 400	630 - 800 (3-POLE)
1,5-16 mm2	KKL3X1X16T	KKL1X16 (only top)	KKL1X16 (only top)	KKL1X16 (only top)	KKL1X16 (only top)	-	-	-	-
16-50 mm2	-	KKL1X50M (only top)	KKL1X50M (only top)	KKL3X1X50TE	KKL4X1X50TE	KKL1X50T2	KKL2X50	-	-
6-95 mm2	-	-	-	-	-	-	KKL1X95	-	-
16-120 mm2	-	-	-	-	-	KKL1X120T	-	-	-
25-150 mm2	-	-	-	-	-	-	KKL1X150, KKL2X150VM	KKL1X150, KKL2X150VM	KKL2X150, KKL2X150VB, KKL2X150VM, KLH2X150
35-240 mm2	-	-	-	-	-	-	KKL1X240M8, KKL2X240VB, KLH2X240	KKL1X240, KKL2X240VB, KLH2X240	KKL2X240, KKL2X240VB, KKL2X240VM, KLH2X240
95-300 mm2	-	-	-	-	-	-	-	-	KKL2X300, KKL2X300VB, KKL2X300VM, KLH2X300

We continuously improve our products; specifications, features and appearances may change without prior notice.

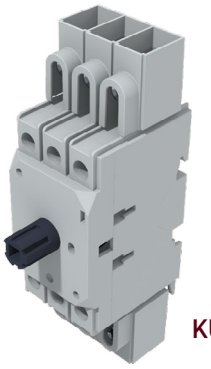

KU340 + KKL3X1X16T

SWITCH	KUE		EVA		VKA
A	16-40 N (3-POLE)	63-125 N (3-POLE)	125 - 160	200 - 250	200 - 250
1,5-16 mm2	KKL1X16 (only top)	KKL1X16 (only top)	-	-	-
16-50 mm2	KKL1X50M (only top)	KKL3X1X50TE	KKL1X50T2	KKL2X50	KKL2X50
6-95 mm2	-	-	-	KKL1X95	KKL1X95
16-120 mm2	-	-	KKL1X120T1 + KKL1X120T2 + KKL1X120T3	KKL1X120RS	KKL1X120RS
25-150 mm2	-	-	-	-	-
35-240 mm2	-	-	-	-	-
95-300 mm2	-	-	-	-	-

SWITCH	KVKE			
A	63 - 160 (3 POLE)	200 - 250 (3 POLE)	315 - 400	630
1,5-16 mm2	-	-	-	-
16-50 mm2	KKL1X50T2	KKL2X50	KKL2X50	-
6-95 mm2	-	KKL1X95, KKL2X95	KKL2X95	-
16-120 mm2	KKL1X120T2	KKL1X120RS	-	-
25-150 mm2	KKL1X150T2 + LS125	KKL1X150, KKL2X150LR, KLH2X150, KKL2X150VM, KKL2X150VB	KKL1X150, KKL2X150LR, KLH2X150, KKL2X150VM, KKL2X150VB	KKL2X150, KKL2X150VB, KKL2X150VM
35-240 mm2	-	KKL1X240, KKL2X240LR, KLH2X240, KKL2X240VB, KKL2X240VM	KKL1X240, KKL2X240LR, KLH2X240, KKL2X240VB, KKL2X240VM	KKL2X240, KKL2X240VB, KKL2X240VM, KLH2X240
95-300 mm2	-	-	-	KKL2X300, KKL2X300VB, KKL2X300VM, KLH2X300

We continuously improve our products; specifications, features and appearances may change without prior notice.

katko.com

KATKO is a Finnish electrical industry company, specializing in designing, manufacturing, and delivering leading solutions for the electrical installation sector.

At KATKO, we are pioneering high-quality electrical switches and other installation products. We are driven by a strong commitment to sustainability and installer-friendly solutions and masters real-world applications through distinctly Finnish design principles: functionality without compromise, beauty in simplicity, built to endure. Supported by our extensive network of distribution partners and manufacturing facilities in Finland and Poland, we are able to ensure the availability of our solutions in over 70 countries around the globe.

Conditions of Sale

Please scan the QR code to read our Conditions of Sale.

Contact us

KATKO Oy
Ruosilantie 2
00390 Helsinki, Finland
Tel. +358 (0)9 849 600
customerservice@katko.com

KATKO Electrical Ltd
The Courtyard, 225 Denby Dale Road, Wakefield, West Yorkshire WF2 7AJ.
Tel. +447487712817
customerservice@katko.com

KATKO Oy (DMCC Branch)
Unit 903-06, Reef Tower, JLT, Dubai, UAE
Tel. +971 4 4487405
customerservice@katko.com

KATKO AB
Katrinedalsgatan 13,
504 52 Borås
Tel. +46 730 39 39 40
customerservice@katko.com

KATKO Poland Sp. z o. o.
Piątki 87
13-100 Nidzica, Poland
Tel. +48 534 572 908
customerservice@katko.com

01/2026